Published: 27-Jun-2011

Engine Cooling - V8 5.0L Petrol -

Lubricants

Description	Specification
Anti-freeze	Havoline Extended Life Coolant (XLC)
Anti-freeze concentration	50%

Capacities

Item	Specification
Vehicles fitted with 4 zone air conditioning (A/C)	16.6L (dry capacity)
Vehicles fitted with 2 zone A/C	15.9L (dry capacity)

Torque Specifications

Description	Nm	lb-ft	lb-in
Coolant expansion tank retaining bolt	10	7	-
Cooling fan retaining nut	65	48	-
Thermostat housing retaining bolt	10	7	-
Coolant pump retaining bolts	12	9	-
Radiator air deflector retaining bolts	9	-	80
Refrigerant line to condenser core retaining bolts	10	7	-
Radiator retaining bolts	25	18	-
Condenser core to radiator bolts	10	7	-
Coolant bleed screw(s)	3	-	27

mcx30.co

Engine Cooling - V8 5.0L Petrol - Engine Cooling

Description and Operation

COMPONENT LOCATION

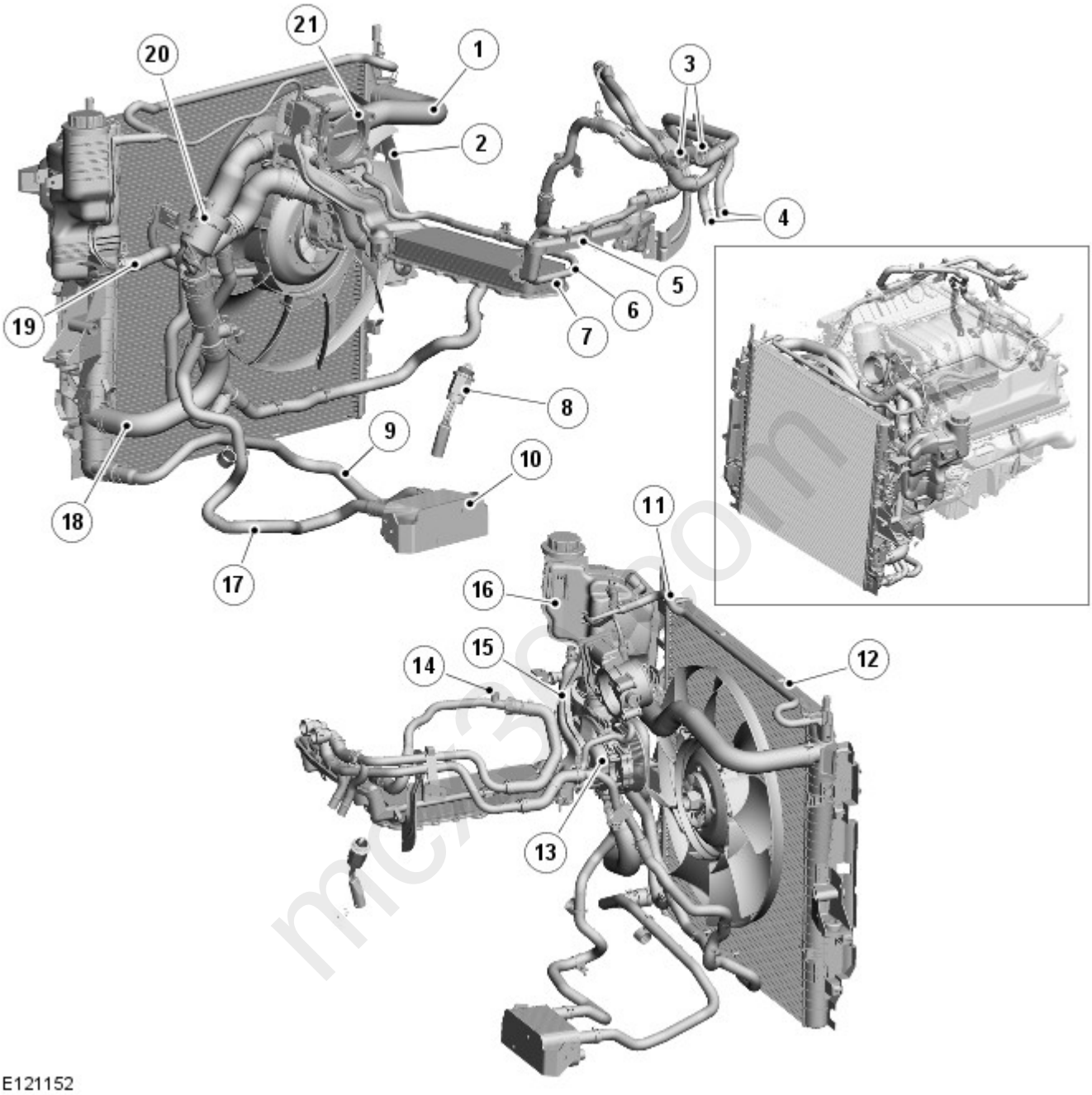

Item	Part Number	Description
1	-	Radiator upper hose
2	-	Cooling fan
3	-	Heater system supply and return hoses
4	-	FFBH (fuel fired booster heater) supply and return connections (where fitted)
5	-	Heater manifold
6	-	Throttle body heater hose
7	-	Engine oil cooler
8	-	Engine block heater (230 V version shown) or drain plug
9	-	Transmission fluid cooler supply hose
10	-	Transmission fluid cooler
11	-	Bleed hoses
12	-	Radiator
13	-	Coolant pump
14	-	Bleed screw
15	-	Outlet tube
16	-	Coolant expansion tank
17	-	Transmission fluid cooler return hose

18	-	Radiator lower hose
19	-	Coolant supply/expansion hose
20	-	Thermostat
21	-	Throttle

INTRODUCTION

The engine cooling system maintains the engine within an optimum temperature range under changing ambient and engine operating conditions. The system is a pressurized expansion tank system with continuous bleeds to separate air from the coolant and prevent the formation of air locks. The engine cooling system also provides:

- Heating for:
  - The passenger compartment.
  - The throttle body.
- Cooling for:
  - The engine oil cooler.
  - The transmission fluid cooler.

The primary components of the engine cooling system are the:

- Coolant pump.
- Thermostat.
- Radiator.
- Cooling fan.
- Expansion tank.
- Outlet tube and heater manifold.
- Connecting hoses and pipes.

COOLANT PUMP

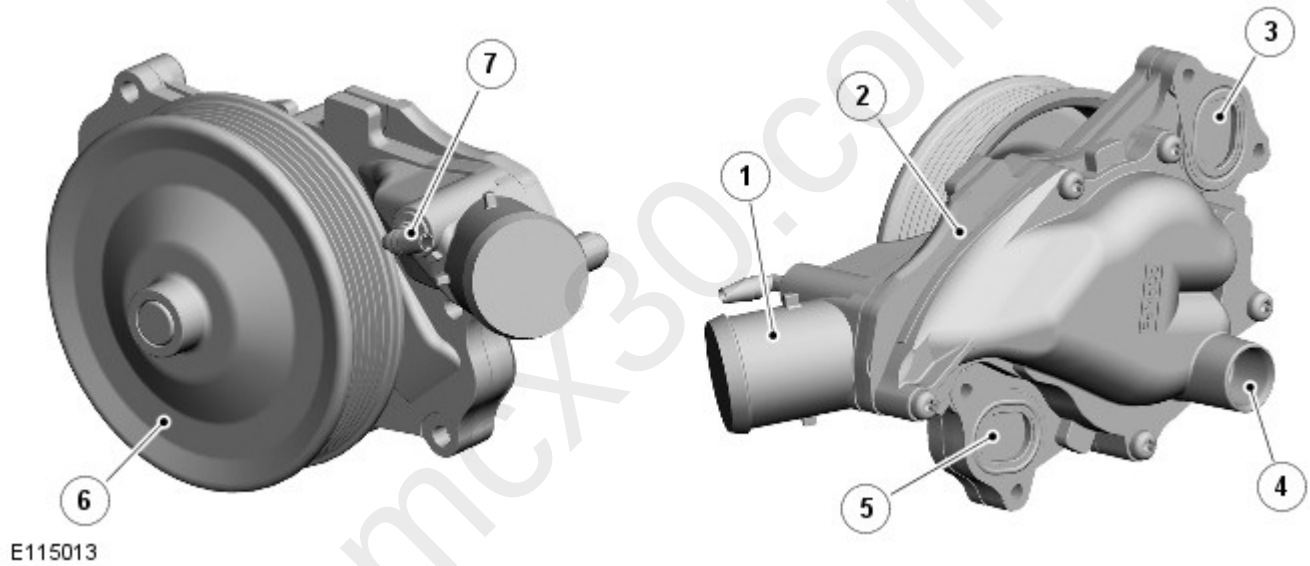

Item	Part Number	Description
1	-	Inlet connection
2	-	Pump body
3	-	Outlet flange to RH cylinder head
4	-	Outlet to engine oil cooler
5	-	Outlet flange to LH cylinder head
6	-	Pulley
7	-	Bleed pipe connection (containing check valve)

The body of the coolant pump contains an impeller attached to a shaft supported in a bearing assembly. The impeller is driven by a pulley, pressed on to the front of the shaft, which is driven by the accessory drive belt.
For additional information, refer to: Accessory Drive (303-05D Accessory Drive - V8 5.0L Petrol, Description and Operation).

Two coolant outlet flanges attach the coolant pump to the front of the cylinder heads. A pipe connects a further coolant outlet to a pipe from the engine oil cooler. A bleed connector is installed in the front of the coolant pump, adjacent to the coolant inlet connection from the thermostat. A check valve is incorporated into the bleed connection.

THERMOSTAT

mcx30.com

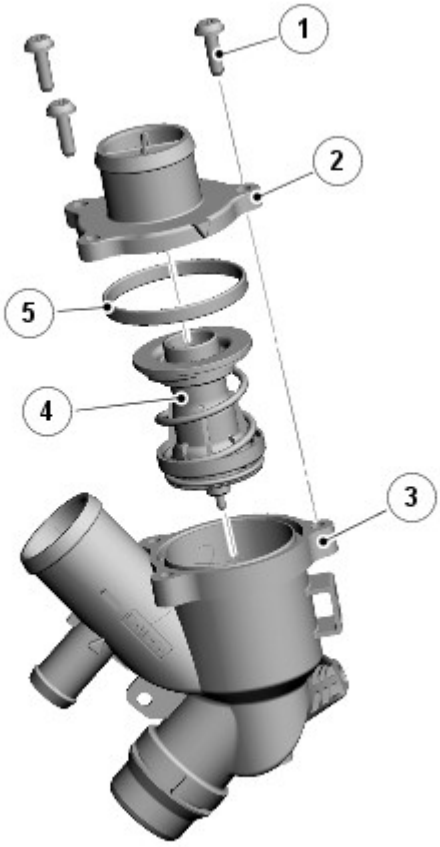

E115014

Item	Part Number	Description
1	-	Screw (3 off)
2	-	Lower body
3	-	Upper body
4	-	Thermostat
5	-	Seal

The thermostat is a multi-stage device located in the coolant pump inlet to provide fast response and control of the engine outlet temperature.

The thermostat allows rapid engine warm-up by preventing coolant flow through the radiator and by limiting coolant flow through the cylinder block when the engine is cold. During warm-up and at engines speeds above approximately 1800 rev/min, a by-pass valve opens to control the coolant flow and pressure, to protect the engine components. When the thermostat opening reaches 6 mm (0.24 in.), the by-pass flow is shut-off. When the thermostat opening exceeds 6 mm (0.24 in.), the radiator coolant flow is further controlled up to the point where the thermostat is fully open. At this point maximum radiator coolant flow is achieved to provide maximum cooling.

The thermostat begins to open at 88 - 90 °C (190 - 194 °F) and is fully open at 102 °C (216 °F).

RADIATOR

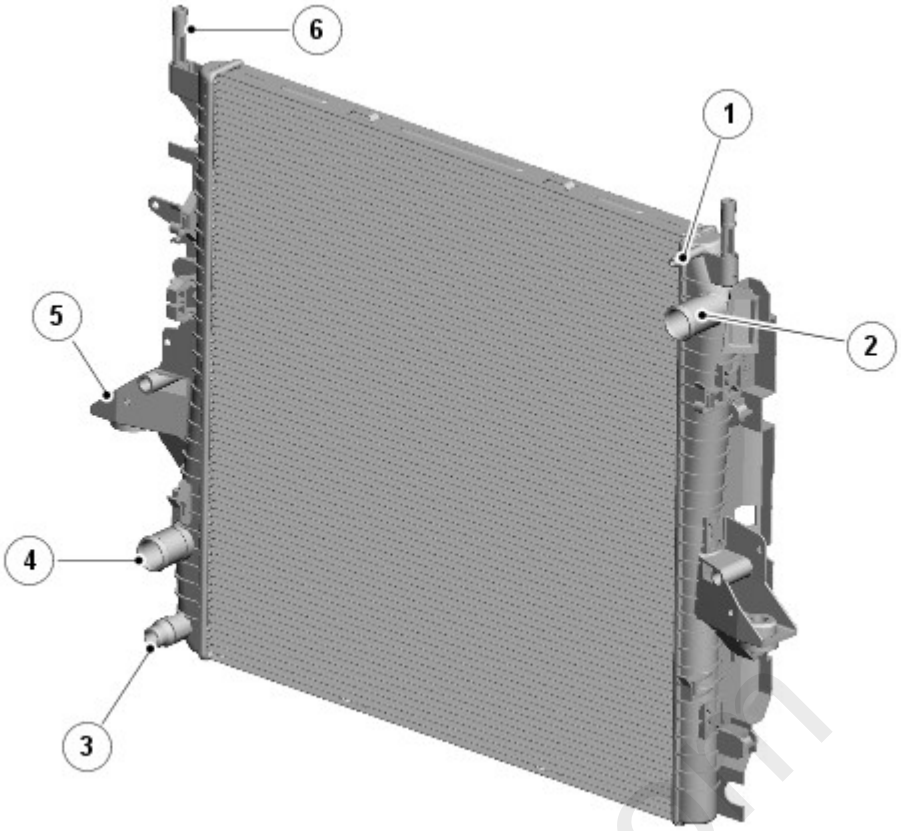

E121154

Item	Part Number	Description
1	-	Bleed hose connection
2	-	Upper hose connection
3	-	Transmission fluid cooler supply hose connection
4	-	Lower hose connection
5	-	Radiator lower support (2 off)
6	-	Radiator upper support (2 off)

The radiator is an aluminum cross flow type with plastic end tanks. Upper and lower supports locate the radiator in the radiator support assembly and the front crush siderails respectively.

Connections are incorporated into the end tanks for the upper and lower hoses, the supply hose of the transmission fluid cooler and a bleed hose.

COOLING FAN

mcx30.com

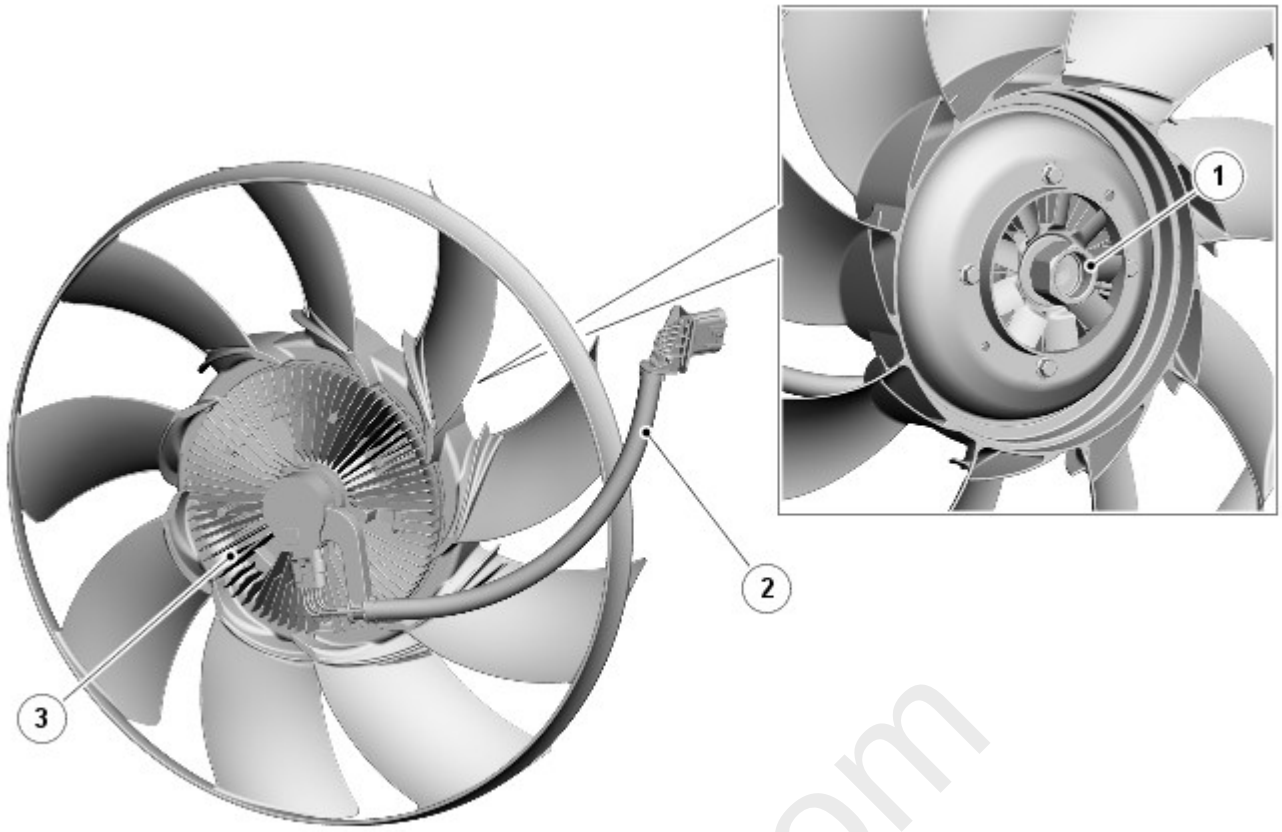

E118879

Item	Part Number	Description
1	-	Securing nut
2	-	Harness
3	-	Electro-viscous drive unit

For additional airflow through the radiator, particularly when the vehicle is stationary or moving slowly, there is an engine driven electro-viscous cooling fan. The cooling fan functions as a normal viscous fan, but with electronic control over the level of engagement of the viscous clutch. The ECM (engine control module) controls the level of engagement to optimize fan speed for all operating conditions.

A securing nut attaches the cooling fan to a drive pulley, which is mounted on the front of the engine and driven by the accessory drive system.

• NOTE: The securing nut has a LH (left-hand) thread.

The blades of the cooling fan are located in a fan cowl attached to the rear of the radiator frame. Brushes around the circumference of the aperture in the fan cowl provide a seal with the blade shroud. An electrical connector in the top left corner of the fan cowl provides the interface between the cooling fan harness and the vehicle wiring.

EXPANSION TANK

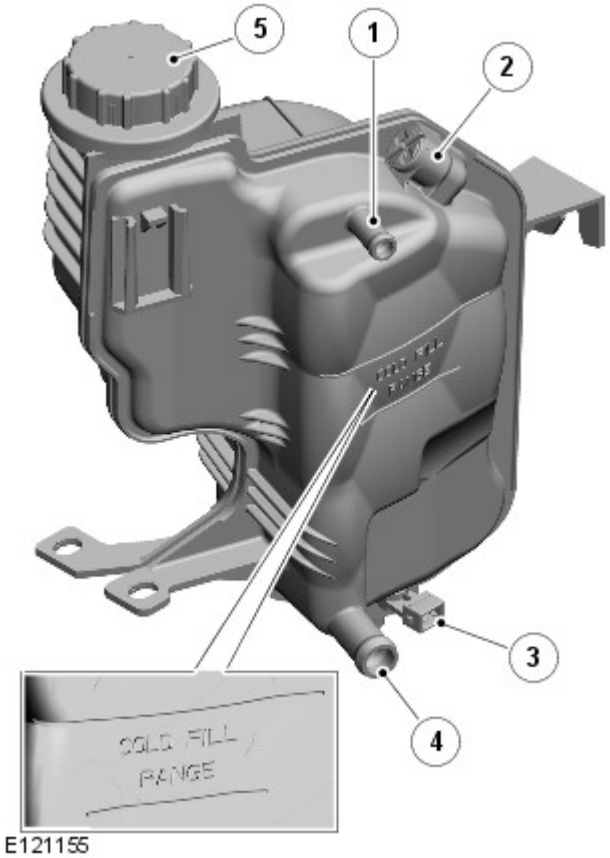

Item	Part Number	Description
1	-	Bleed hose connection
2	-	Bleed screw
3	-	Level sensor
4	-	Coolant supply/expansion hose connection
5	-	Filler cap

The expansion tank is installed on the LH side of the cooling module, attached to the radiator support assembly and the floor sidemember. A filler cap, bleed screw and level sensor are incorporated into the expansion tank. MAX and MIN level markings are molded onto the exterior of the tank.

The expansion tank provides the following functions:

- Service fill.
- Coolant expansion during warm-up.
- Air separation during operation.
- System pressurization by the filler cap.

The expansion tank has an air space of approximately 1.1 liters (1.16 US quarts), above the MAX level, to allow for coolant expansion.

OUTLET TUBE AND HEATER MANIFOLD

Outlet Tube

mcx30.com

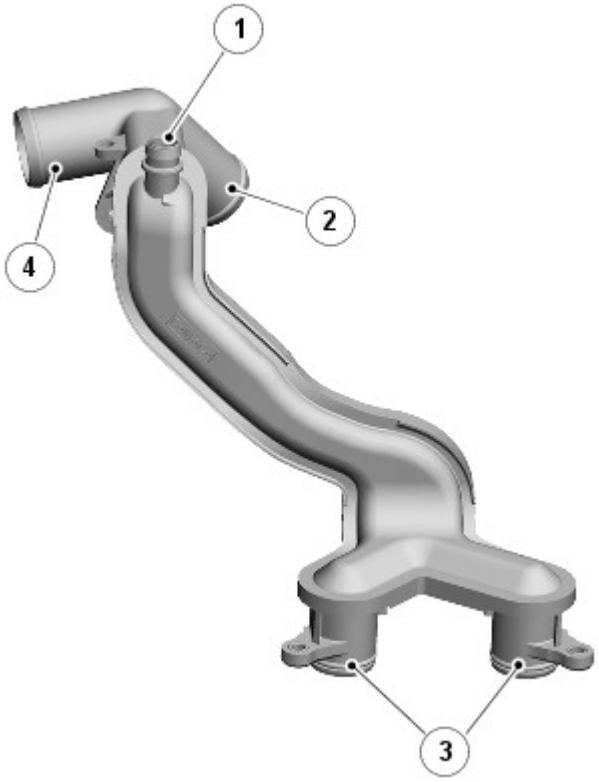

E123842

Item	Part Number	Description
1	-	Bleed spigot (fitted with blanking plug)
2	-	Radiator upper hose connection
3	-	Cylinder block connections
4	-	Thermostat hose connection

Heater Manifold

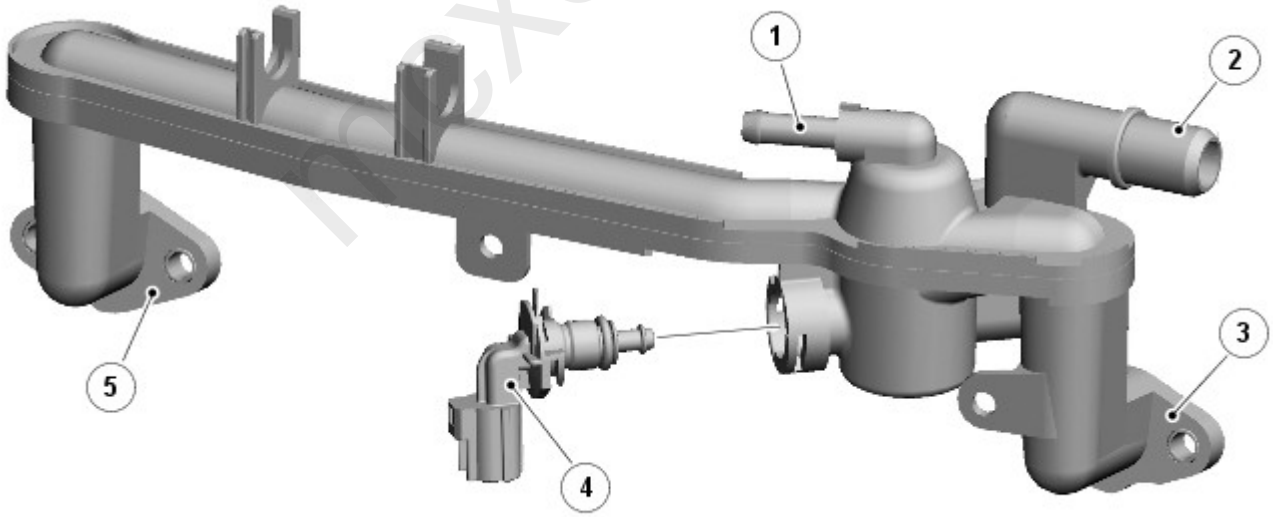

E115021

Item	Part Number	Description
1	-	Throttle body heater hose connection
2	-	Heater core supply hose connection
3	-	RH cylinder head connection
4	-	Engine coolant temperature sensor
5	-	LH cylinder head connection

ENGINE COOLANT

The engine coolant is formulated to last for ten years or 240,000 km (150,000 miles). The coolant is silicate free and must not be mixed with conventional engine coolant.

CONTROL DIAGRAM

• NOTE: A = Hardwired; N = Medium speed CAN (controller area network).

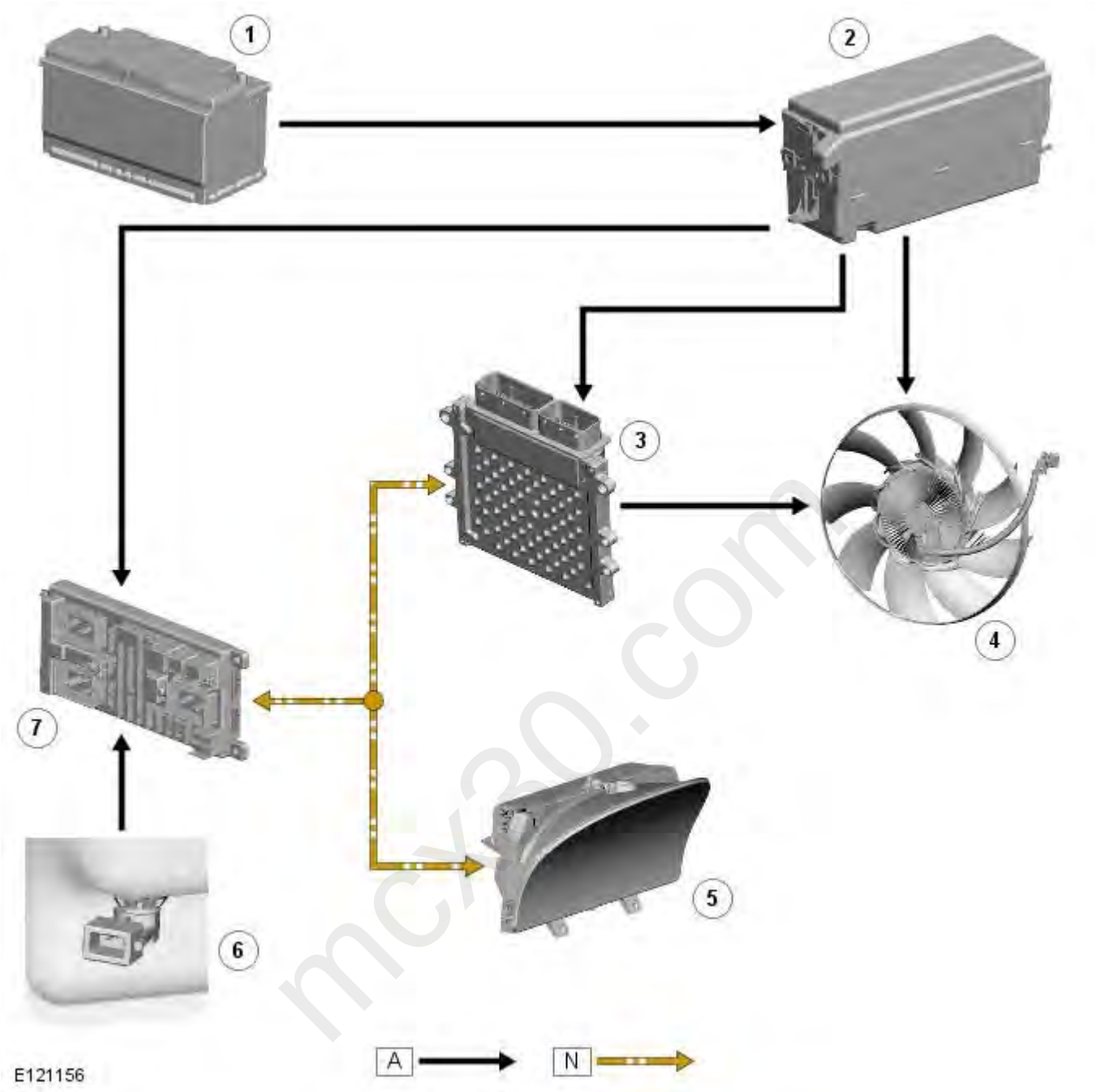

Item	Part Number	Description
1	-	Battery
2	-	EJB (engine junction box)
3	-	ECM (engine control module)
4	-	Cooling fan
5	-	Instrument cluster
6	-	Coolant level sensor
7	-	CJB (central junction box)

OPERATION

Engine Cooling Flow Diagram

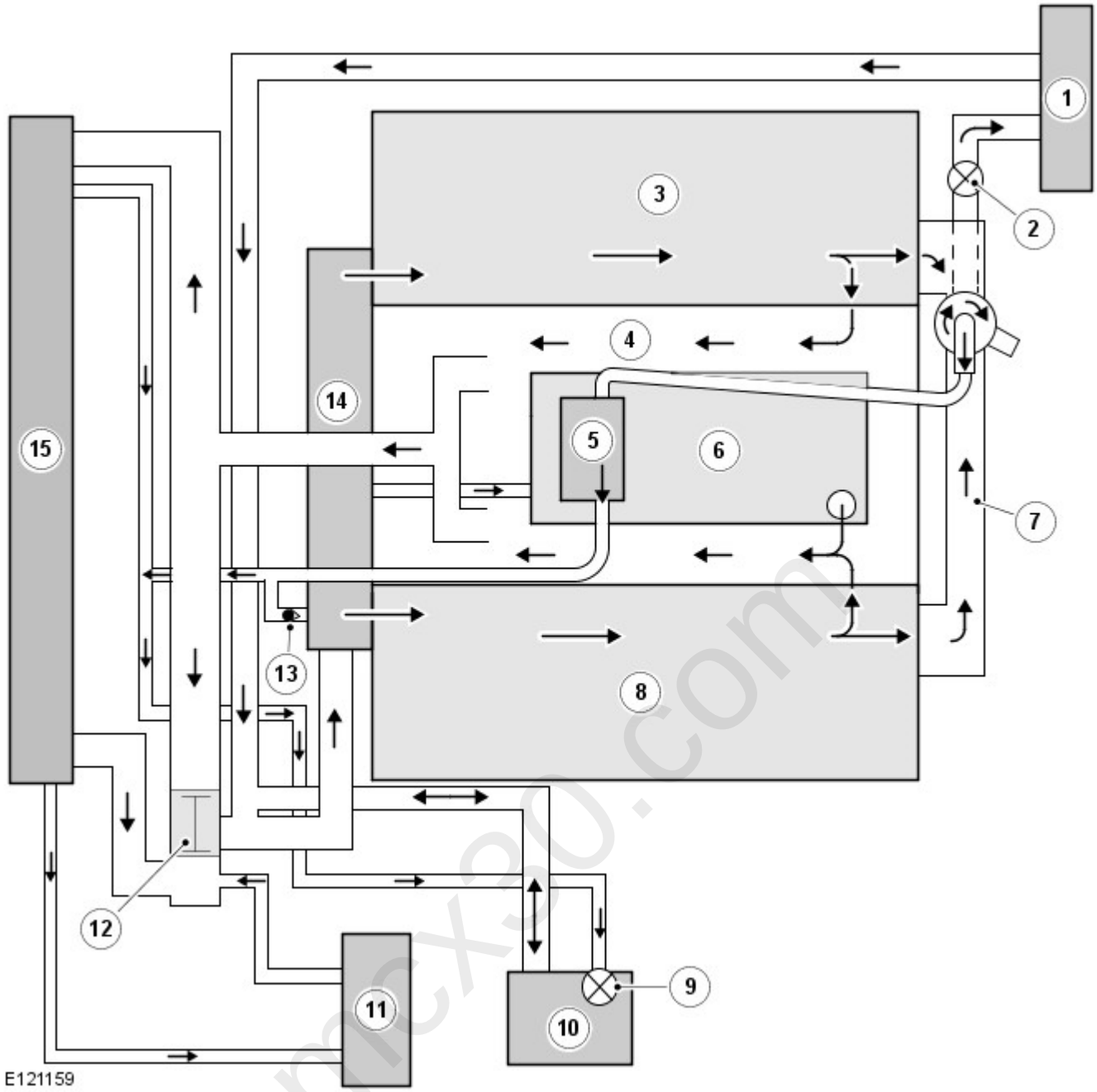

Item	Part Number	Description
1	-	Heater system
2	-	Bleed screw
3	-	RH cylinder head
4	-	Cylinder block
5	-	Throttle
6	-	Engine oil cooler
7	-	Heater manifold
8	-	LH cylinder head
9	-	Bleed screw
10	-	Expansion tank
11	-	Transmission fluid cooler
12	-	Thermostat
13	-	Check valve
14	-	Coolant pump
15	-	Radiator

When the engine is running, the coolant is circulated around the engine cooling system by the coolant pump. From the coolant pump, coolant flows through the cylinder heads and the engine oil cooler into the cylinder block and the heater manifold.

In the cylinder block, the coolant flows forwards to the outlet tube. When the coolant is cold, the thermostat is closed and the coolant flows direct from the outlet tube back to the coolant pump. Once the coolant reaches operating temperature the thermostat begins to open, to control system temperature, and coolant flows from the outlet tube to the coolant pump via the radiator. When the thermostat is open, the coolant flow through the radiator also generates a coolant flow through the transmission fluid cooler.

From the heater manifold the coolant flows through the electronic throttle and the heater core, in parallel circuits that are unaffected by the position of the thermostat. From the electronic throttle, the coolant merges with bleed coolant from the coolant pump and flows to the expansion tank. From the heater system, the coolant flows back to the inlet of the coolant pump.

Expansion and contraction of the coolant is accommodated by an air space in the expansion tank and the compliance of the flexible hoses.

If the coolant level in the expansion tank decreases below a predetermined value, the coolant level sensor connects a ground to the CJB (central junction box), which sends a message to the instrument cluster on the medium speed CAN bus to display the message COOLANT LEVEL LOW in the message center.
For additional information, refer to: Information and Message Center (413-08 Information and Message Center, Description and Operation).

To control the cooling fan, the ECM sends a PWM (pulse width modulation) signal to the cooling fan drive unit. The ECM varies the duty cycle of the PWM signal between 0 and 100% to vary the clutch engagement and thus fan speed. The ECM determines the required fan speed from:

- Coolant, ambient air and transmission fluid temperatures
- A/C (air conditioning) system condenser cooling fan demand
- Road speed
- Terrain optimization mode.

If the electrical connections to the viscous fan are disconnected the fan will idle and the engine may overheat. If the ECM detects a cooling fan fault it stores the appropriate DTC (diagnostic trouble code) and signals the instrument cluster on the medium speed CAN bus to display the message COOLING SYSTEM FAULT MONITOR GAUGE in the message center.

mcx30.com

Published: 11-May-2011

Engine Cooling - V8 5.0L Petrol - Engine Cooling

Diagnosis and Testing

Principle of Operation

For a detailed description of the engine cooling system and operation, refer to the relevant Description and Operation section of the workshop manual. REFER to: Engine Cooling (303-03D Engine Cooling - V8 5.0L Petrol, Description and Operation).

Inspection and Verification

CAUTION: Diagnosis by substitution from a donor vehicle is **NOT** acceptable. Substitution of control modules does not guarantee confirmation of a fault and may also cause additional faults in the vehicle being checked and/or the donor vehicle.

• NOTE: Check and rectify basic faults before beginning diagnostic routines involving pinpoint tests.

1. **1.** Verify the customer concern.
2. **2.** Visually inspect for obvious signs of mechanical or electrical damage.

Visual Inspection

Mechanical	Electrical
• Coolant leaks • Coolant Hoses • Coolant expansion tank • Radiator • Heater core • Accessory drive belt • Viscous fan	• Fuses • Harnesses • Loose or corroded connector(s) • Engine Coolant Temperature (ECT) sensor

3. **3.** If an obvious cause for an observed or reported concern is found, correct the cause (if possible) before proceeding to the next step.
4. **4.** If the cause is not visually evident, verify the symptom and refer to the Symptom Chart, alternatively check for Diagnostic Trouble Codes (DTCs) and refer to the DTC Index.

Symptom Chart

Symptom	Possible Causes	Action
Coolant loss	• Hoses • Hose connections • Radiator • Water pump • Heater core • Gaskets • Engine casting cracks • Engine block core plugs	Carry out a visual inspection. If there are no obvious leaks, carry out a cooling system pressure test. Rectify any leaks as necessary.
Overheating	• Low/Contaminated coolant • Thermostat • Viscous fan • ECT sensor • Restricted air flow over the radiator	Check the coolant level and condition. Carry out a cooling system pressure test. Rectify any leaks as necessary. Check the thermostat and rectify as necessary. Check the viscous fan operation, make sure the viscous fan rotates freely. Check for obstructions to the air flow over the radiator. Rectify as necessary.
Engine not reaching normal temperature	• Thermostat • Viscous fan • Thermostat • Electric fan • Fan speed module	Check the thermostat operation. Check the viscous fan operation, make sure the viscous fan is not seized. Rectify as necessary.

DTC Index

For a list of Diagnostic Trouble Codes (DTCs) that could be logged on this vehicle, please refer to Section 100-00. REFER to: Diagnostic Trouble Code (DTC) Index - V8 5.0L Petrol, DTC: Engine Control Module (PCM) (100-00 General Information, Description and Operation).

mcx30.com

Published: 11-May-2011

Engine Cooling - V8 5.0L Petrol - Cooling System Draining and Vacuum Filling

General Procedures

Draining

1. Refer to: Engine Cover - V8 5.0L Petrol (501-05 Interior Trim and Ornamentation, Removal and Installation).

2. **2.** WARNING: Make sure to support the vehicle with axle stands.

   Raise and support the vehicle.

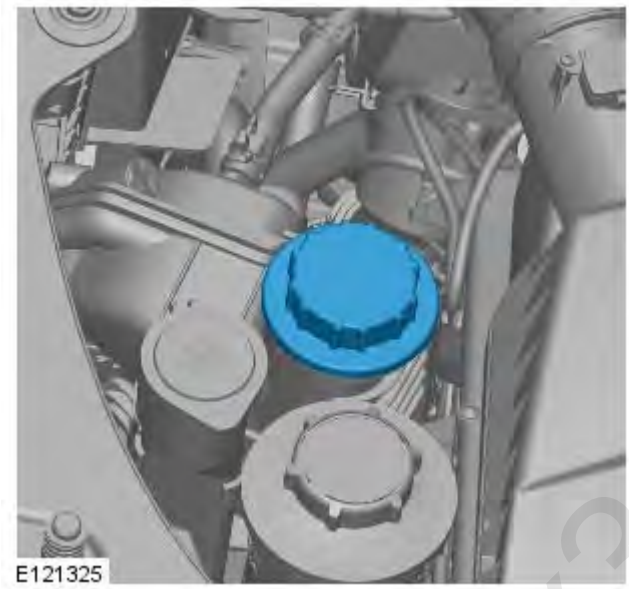

3. **3.** WARNING: Release the cooling system pressure by slowly turning the coolant expansion tank cap a quarter of a turn. Cover the expansion tank cap with a thick cloth to prevent the possibility of scalding. Failure to follow this instruction may result in personal injury.

   • CAUTIONS:

   Since injury such as scalding could be caused by escaping steam or coolant, make sure the vehicle cooling system is cool prior to carrying out this procedure

   Be prepared to collect escaping coolant.

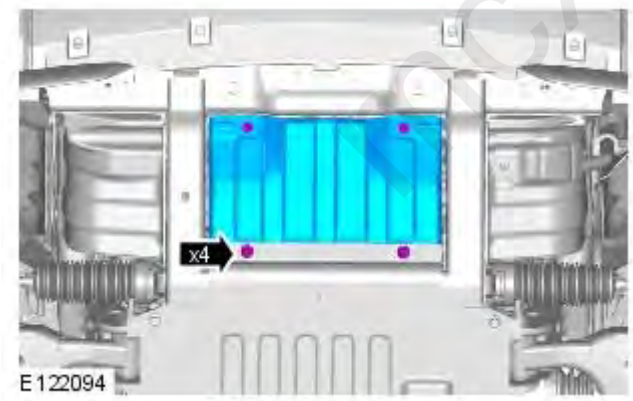

4. Remove the 4 bolts.

mcx30.com

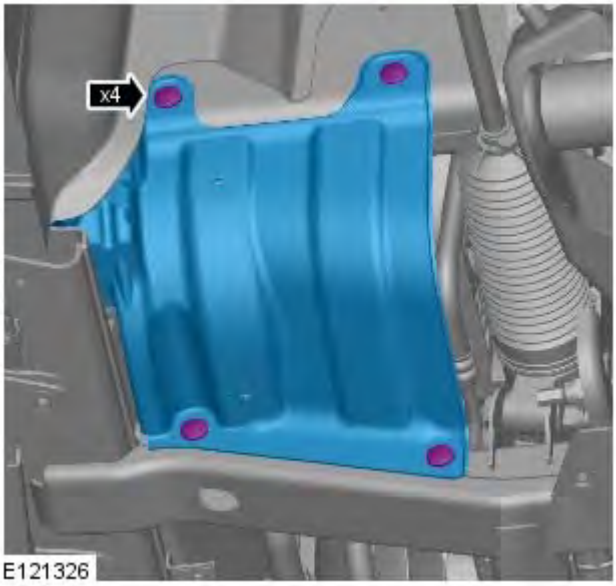

5.

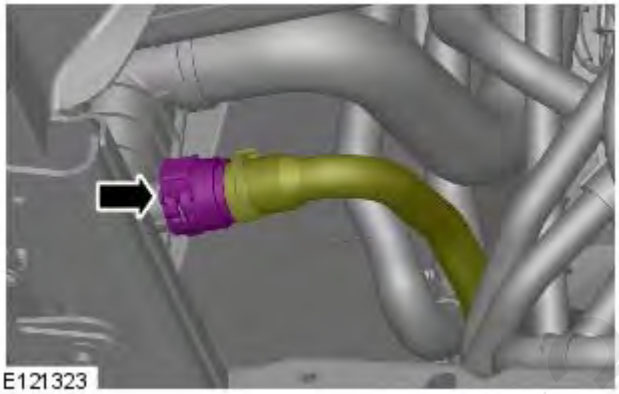

6. **6.** CAUTION: Be prepared to collect escaping coolant.

   Position a container to collect the fluid.

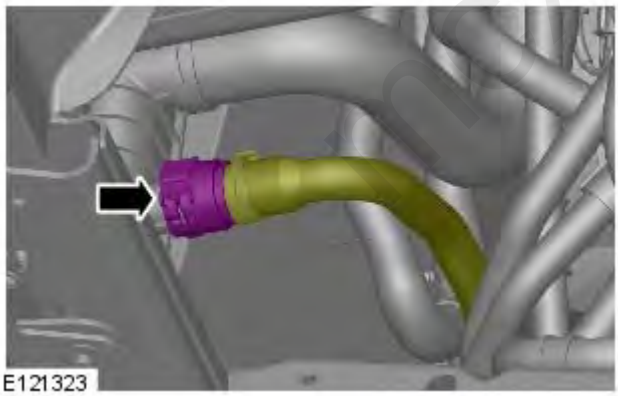

7. Install the lower coolant hose to the radiator.

mex30.com

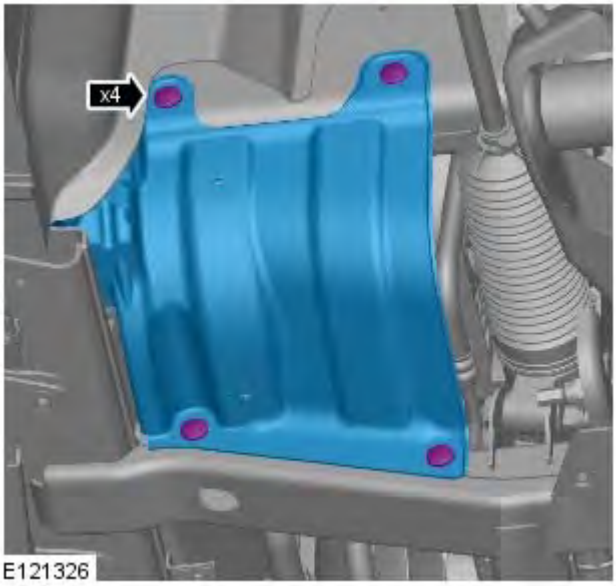

8. Install the LH splash shield.

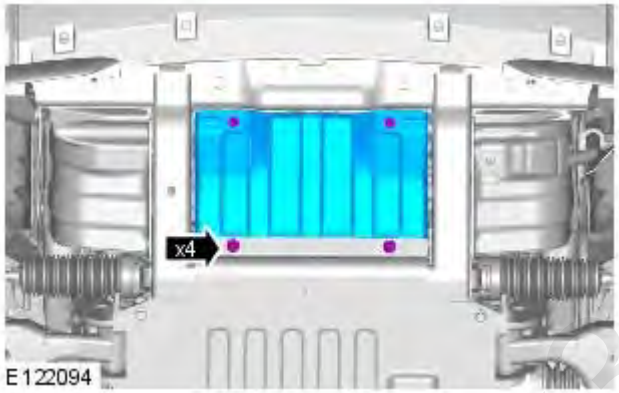

9. *Torque:* 10 Nm

Filling

1. Lower the vehicle.

2. **11.** CAUTION: Anti-freeze concentration must be maintained at 50%.

   - Install the cooling system vacuum refill adaptor to the expansion tank.
   - Install the vacuum filler gauge to the cooling system vacuum refill adaptor.
   - Install the venturi tube assembly to the vacuum filler gauge.

3. **12.** NOTE: Make sure the coolant supply valve is in the closed position on the vacuum filler gauge assembly.

   • NOTE: The coolant vacuum fill tool needs an air pressure of 6 to 8 bar (87 to 116 psi) to operate correctly.

   • NOTE: Small diameter or long airlines may restrict airflow to the coolant vacuum fill tool.

   Connect a regulated compressed air supply to the venturi tube assembly.

4. Position the evacuated air hose into a container.

5. Open the air supply valve.

mcx30.com

6. **15.** NOTE: Make sure the coolant supply hose is positioned into a container of fifty percent mixture of Jaguar Premium Cooling System Fluid or equivalent, meeting Jaguar specification WSS M97B44-D and fifty percent water. Make sure no air can enter the coolant supply hose.

   Open the coolant supply valve for 2 seconds to prime the coolant supply hose.

7. Apply air pressure progressively until the arrow on the vacuum filler gauge reaches the green segment.

8. Disconnect the compressed air supply line.

9. **18.** NOTE: Close the coolant supply valve when the coolant expansion tank MAX mark is reached or coolant movement has ceased.

   Open the coolant supply valve and allow the coolant to be drawn into the system.

10. Remove the vacuum filler gauge and cooling system vacuum refill adaptor assembly.

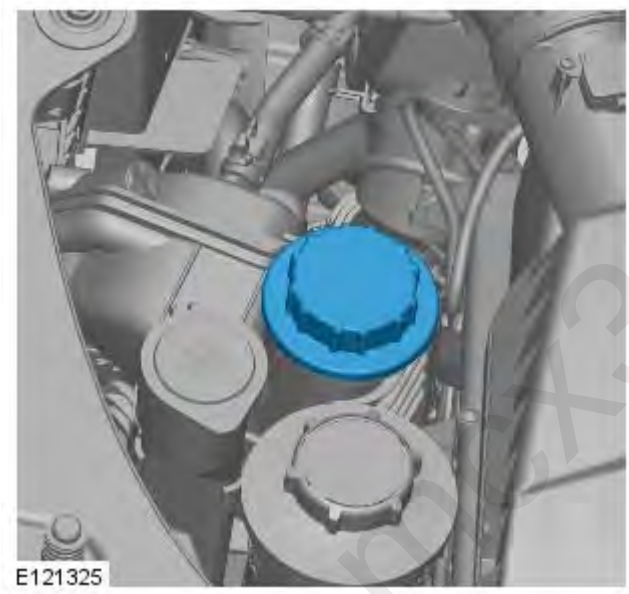

11. **20.** CAUTION: Correct installation of the Coolant expansion tank cap can be obtained by tightening the cap until an audible click is heard.

12. Set the heater controls to maximum.

13. **22.** CAUTION: Observe the engine temperature gauge. If the engine starts to over-heat switch off immediately and allow to cool. Failure to follow this instruction may cause damage to the vehicle

    Start the engine and idle until hot air is emited at the face registers.

14. Switch the heater off.

15. Raise the engine speed to 2000 RPM for eight minutes.

16. **25.** CAUTION: Switch off the engine and allow the coolant temperature to go cold.

    Switch the engine off.

mex30.com

17. Visually check the engine and cooling system for signs of coolant leakage.

18. **27.** WARNING: When releasing the cooling system pressure, cover the coolant expansion tank cap with a thick cloth.

    • CAUTIONS:

    Since injury such as scalding could be caused by escaping steam or coolant, make sure the vehicle cooling system is cool prior to carrying out this procedure

    Make sure the coolant level remains above the "COLD FILL RANGE" lower level mark.

    • NOTE: When the cooling system is warm, the coolant will be approximately 10mm above the upper level mark on the expansion tank with the cap removed.

    Check and top-up the coolant if required.

mcx30.com

Published: 11-May-2011

Engine Cooling - V8 5.0L Petrol - Cooling System Draining, Filling and Bleeding

General Procedures

Draining

1. Refer to: Air Cleaner Outlet Pipe T-Connector (303-12D Intake Air Distribution and Filtering - V8 5.0L Petrol, Removal and Installation).

2. **2.** WARNING: Make sure to support the vehicle with axle stands.

   Raise and support the vehicle.

3. Refer to: Engine Undershield (501-02 Front End Body Panels, Removal and Installation).

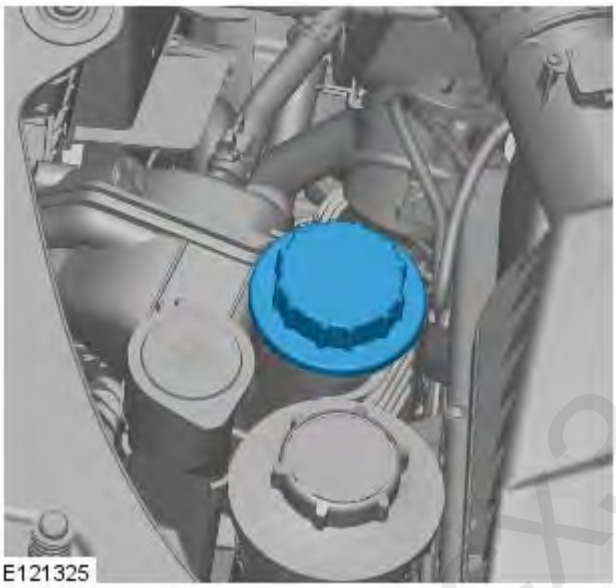

4. **4.** WARNING: Since injury such as scalding could be caused by escaping steam or coolant, do not remove the filler cap from the coolant expansion tank while the system is hot.

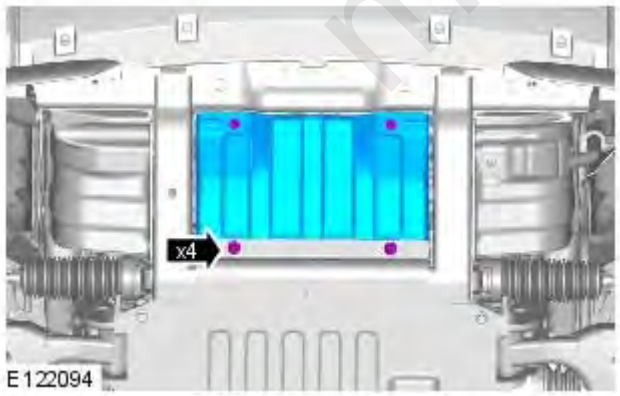

5. Remove the 4 bolts.

mcx30.com

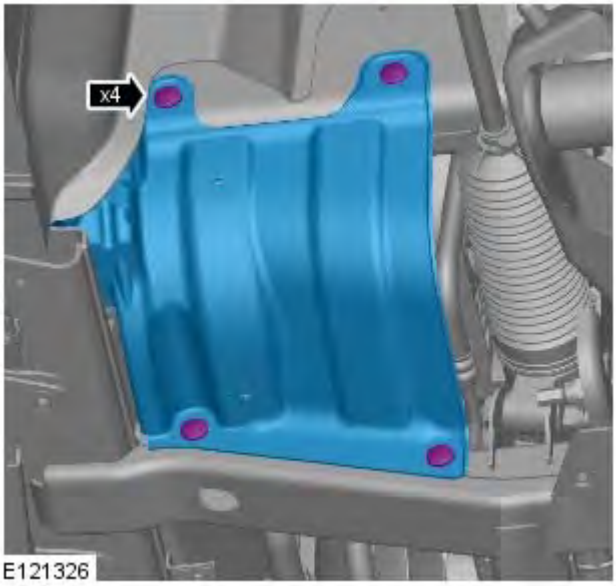

6.

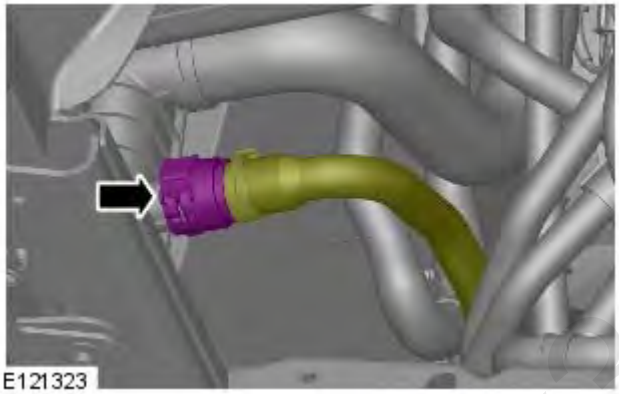

7. **7.** CAUTION: Be prepared to collect escaping coolant.

   Position a container to collect the fluid.

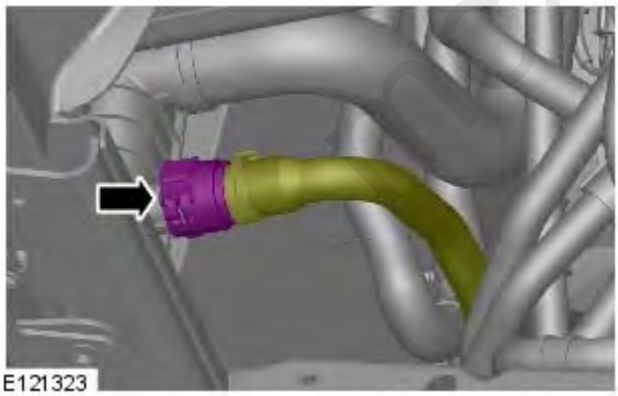

8. Install the lower coolant hose to the radiator.

mex30.com

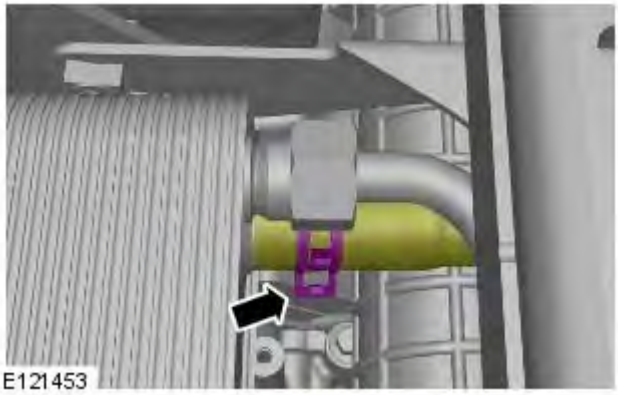

9. **9.** CAUTION: Be prepared to collect escaping coolant.

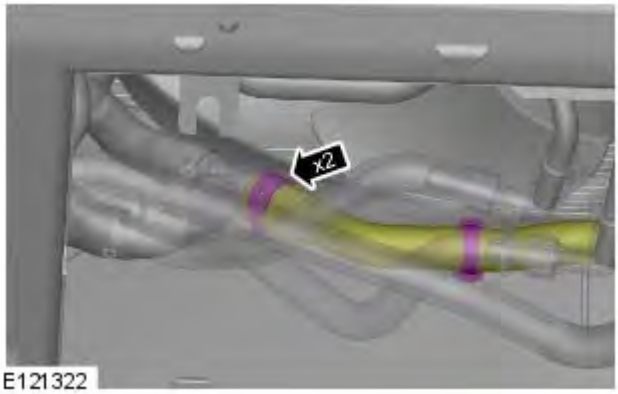

10. **10.** CAUTION: Be prepared to collect escaping coolant.

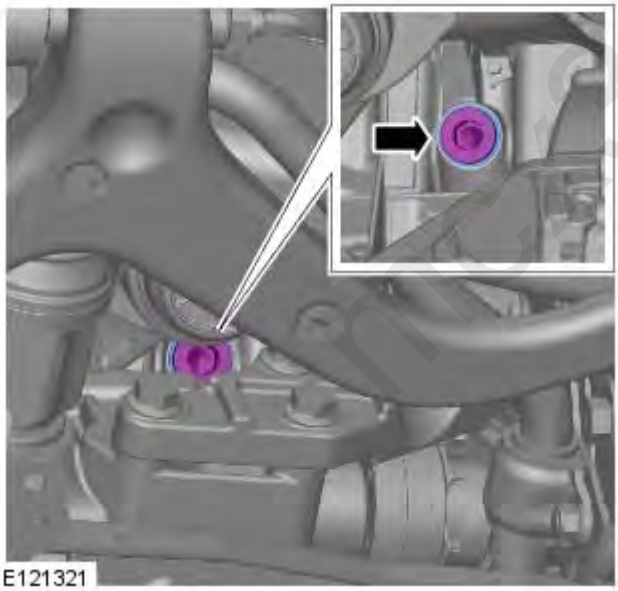

11. **11.** CAUTION: Be prepared to collect escaping coolant.

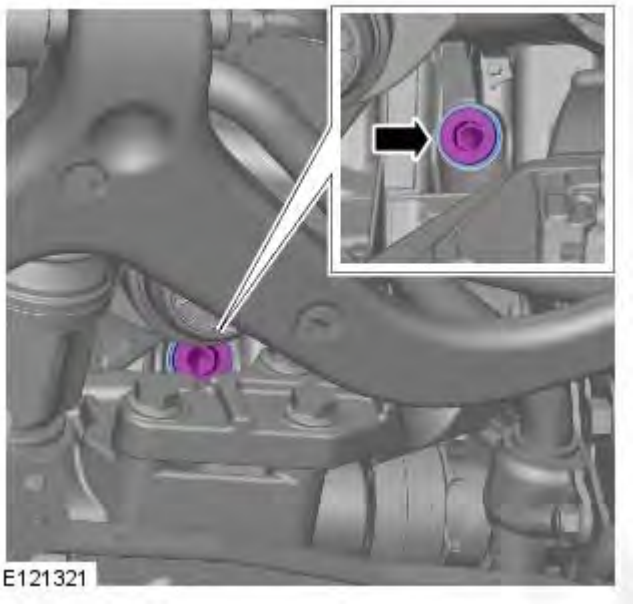

12. **12.** CAUTION: Install a new seal.

    Torque: 50 Nm

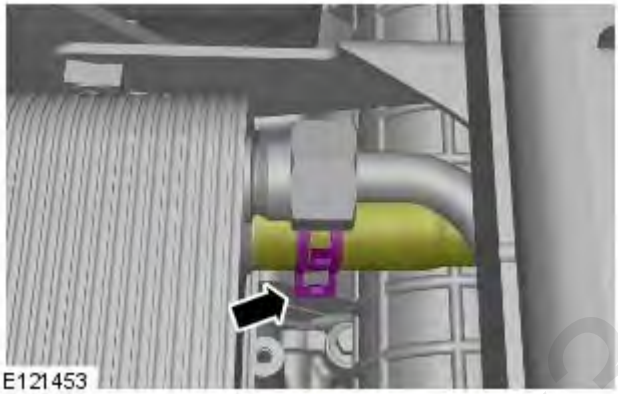

13. Install the coolant hose.

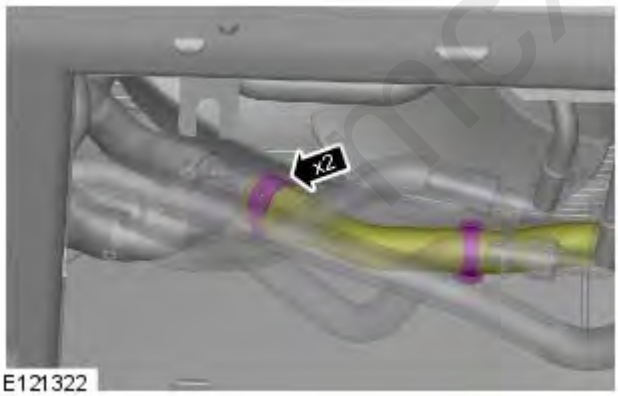

14. Install the coolant hose.

mcx30.com

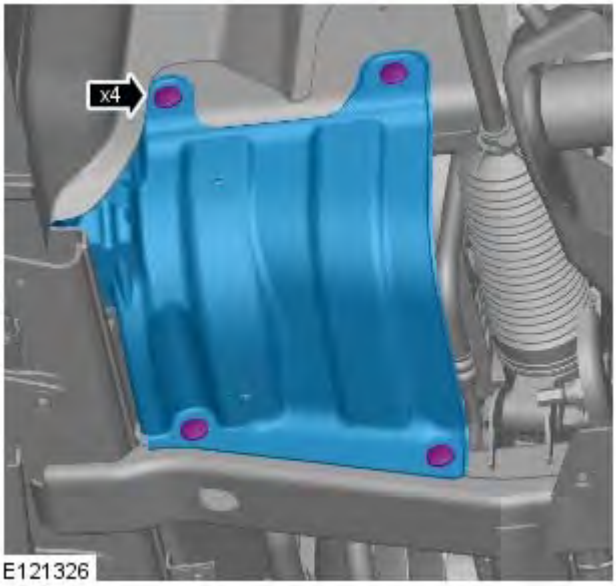

15. Install the LH splash shield.

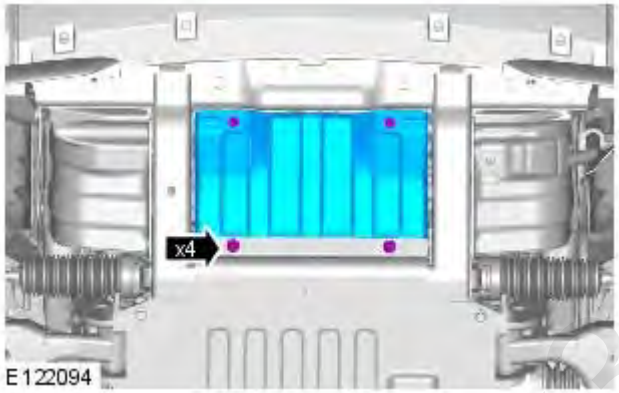

16. *Torque:* 10 Nm

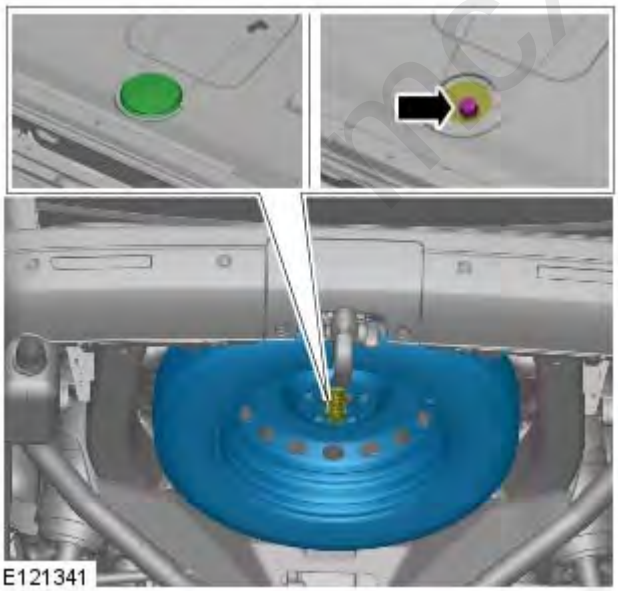

17. Remove the spare wheel and tire.

mex30.com

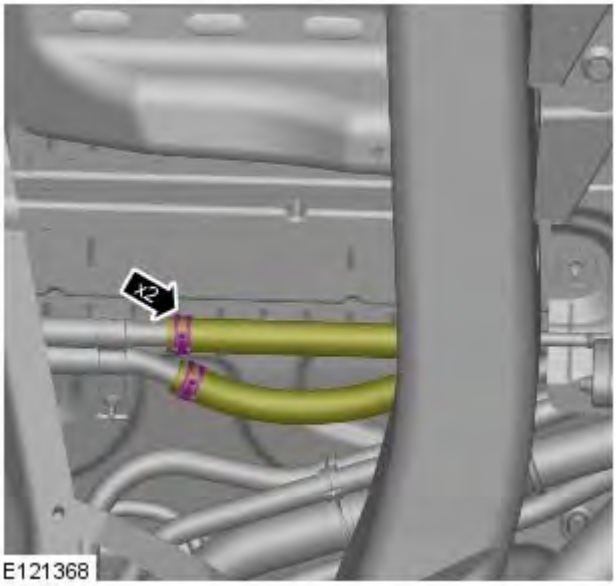

E121368

18. **18.** CAUTION: Be prepared to collect escaping coolant.

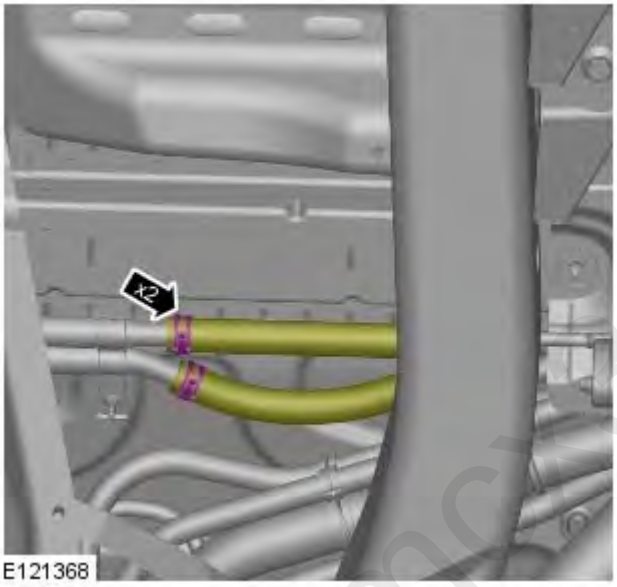

E121368

19. Install the coolant hoses.

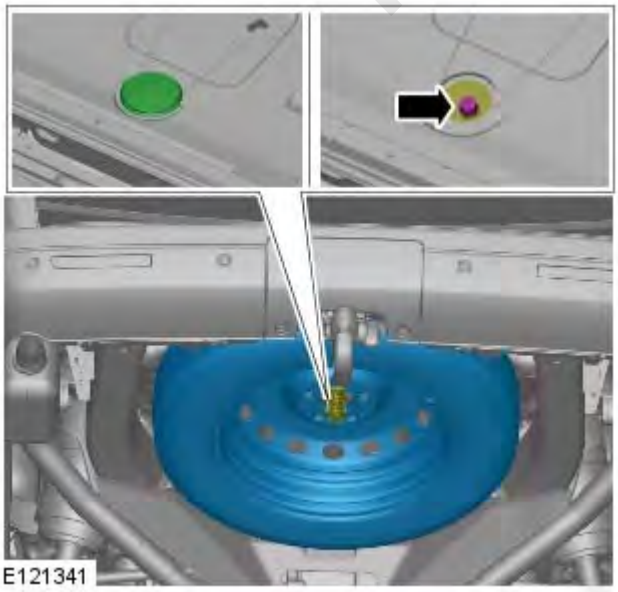
E121341

20. Install the spare wheel and tire.

mc360.com

Filling

1. Refer to: Engine Undershield (501-02 Front End Body Panels, Removal and Installation).

2. Lower the vehicle.

3. Refer to: Air Cleaner Outlet Pipe T-Connector (303-12D Intake Air Distribution and Filtering - V8 5.0L Petrol, Removal and Installation).

4.

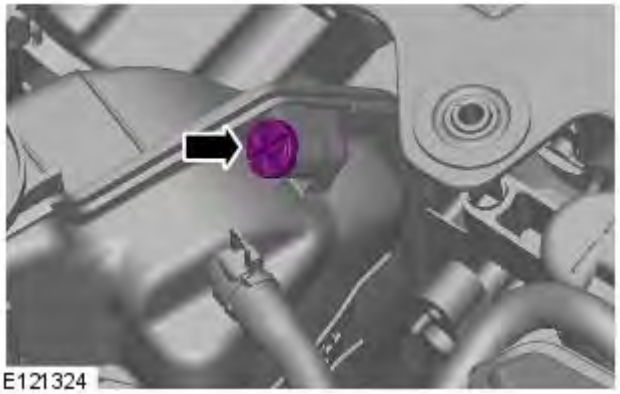
E121324

5. **25.** NOTE: Some variation in the illustrations may occur, but the essential information is always correct.

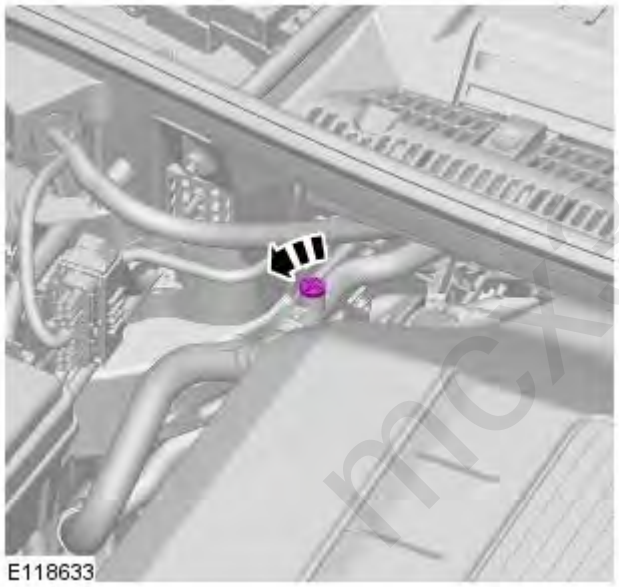
E118633

mcx30.com

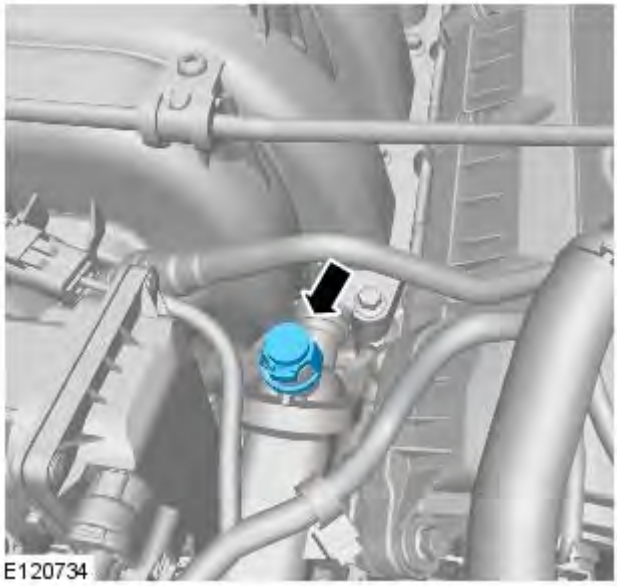

6.

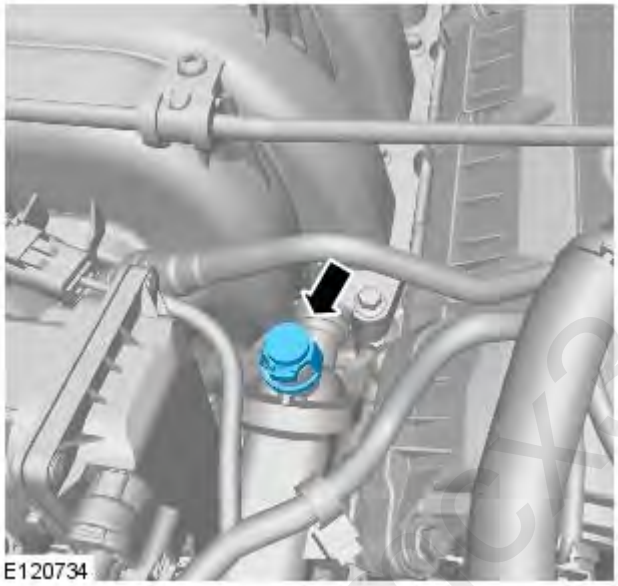

7. **27.** CAUTIONS:

Anti-freeze concentration must be maintained at 50%.

Be prepared to collect escaping coolant.

Fill the coolant expansion tank until coolant appears through the bleed ports.

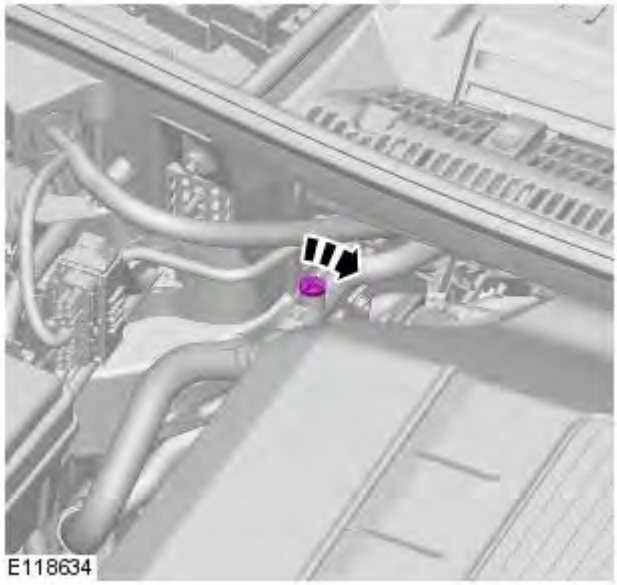

8. **28.** CAUTION: Be prepared to collect escaping coolant.

• NOTE: Some variation in the illustrations may occur, but the essential information is always correct.

Fill the coolant expansion tank until coolant appears through the bleed ports.

mcx30.com

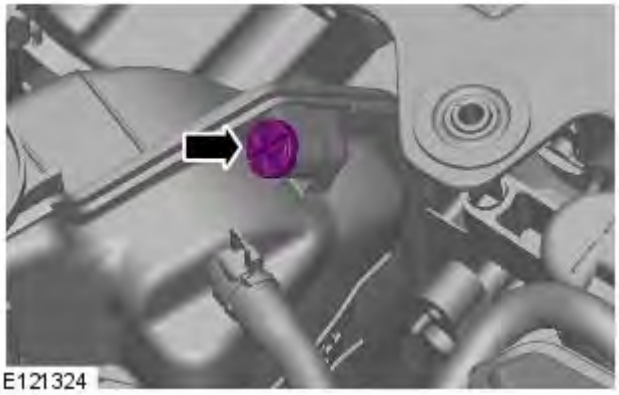
E121324

9. **29.** CAUTION: Be prepared to collect escaping coolant.

   Fill the coolant expansion tank until coolant appears through the bleed ports.

10. Set the heater controls to maximum.

11. Start the engine and continue to fill the coolant until the maximum level is reached.

12. Increase the engine speed to 1500 rpm.

13. Check if the front heater is warm after 2 minutes, if warm proceed to step 15.

14. If not, turn the engine off for 10 seconds and then start the engine and return to step 12.

15. Once the front heater is warm, check if the rear heater is warm (if equipped). If no heat is felt, increase the engine speed to 3000 rpm for 30 seconds and return to idle.

16. Once heat is felt at the rear heater, continue filling with coolant until the level stops dropping and top up to 65mm below rim (to top rib on back of the coolant expansion tank).

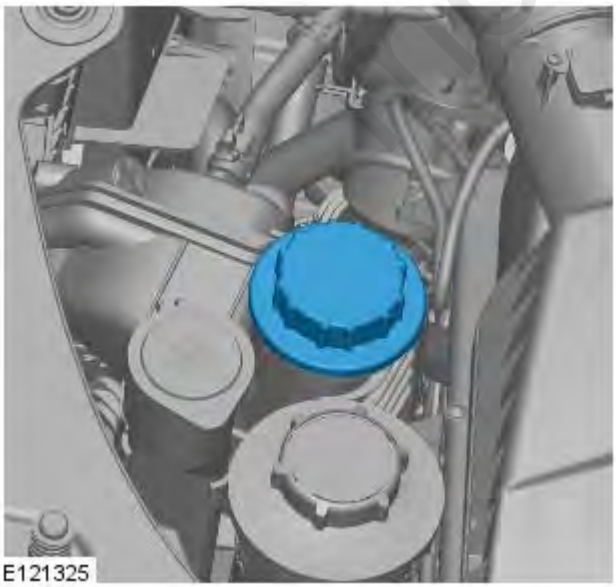
E121325

17. **37.** CAUTION: Correct installation of the Coolant expansion tank cap can be obtained by tightening the cap until an audible click is heard.

18. Switch the heater off.

19. Raise the engine speed to 2000 RPM for eight minutes.

fcx30.com

20. **40.** CAUTION: Switch off the engine and allow the coolant temperature to go cold.

    Switch the engine off and allow to cool.

21. Visually check the engine and cooling system for signs of coolant leakage.

22. **42.** WARNING: When releasing the cooling system pressure, cover the coolant expansion tank cap with a thick cloth.

    • CAUTIONS:

    Since injury such as scalding could be caused by escaping steam or coolant, make sure the vehicle cooling system is cool prior to carrying out this procedure

    Make sure the coolant level remains above the "COLD FILL RANGE" lower level mark.

    • NOTE: When the cooling system is warm, the coolant will be approximately 10mm above the upper level mark on the expansion tank with the cap removed.

    Check and top-up the coolant if required.

mcx30.com

Published: 11-May-2011

Engine Cooling - V8 5.0L Petrol - Coolant Expansion Tank

Removal and Installation

Removal

- NOTE: Removal steps in this procedure may contain installation details.

1. **1.** WARNING: Make sure to support the vehicle with axle stands.

   Raise and support the vehicle.

2. Refer to: Air Cleaner LH (303-12D Intake Air Distribution and Filtering - V8 5.0L Petrol, Removal and Installation).

3.

4.

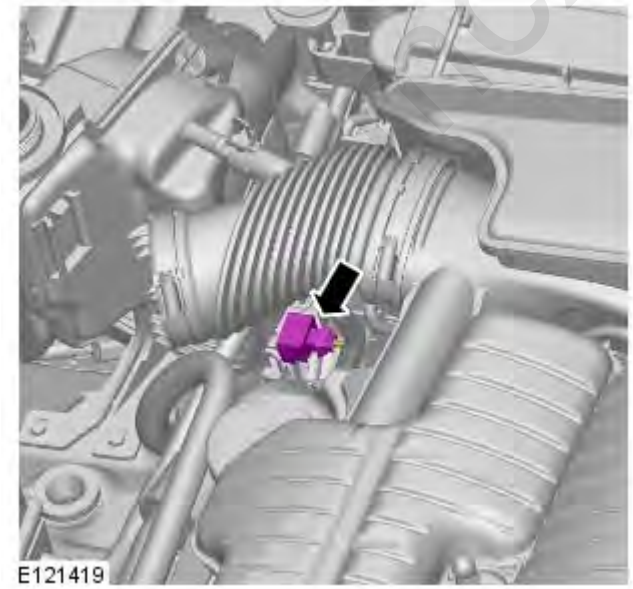

mcx60.com

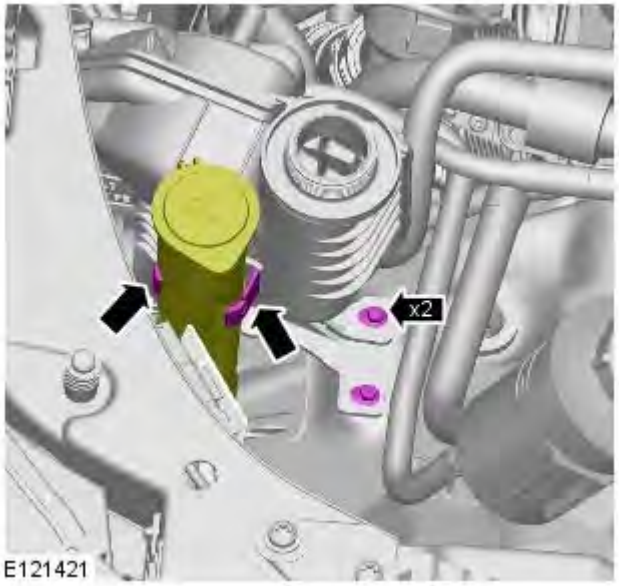

E121421

5. *Torque:* 9 Nm

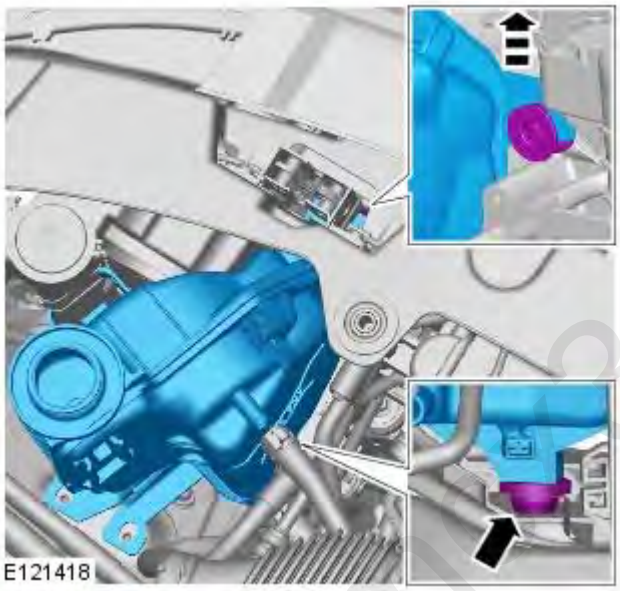
E121418

6.

E121420

7. **7.** NOTE: Do not disassemble further if the component is removed for access only.

Installation

1. To install, reverse the removal procedure.

mcx30.com

Published: 07-Nov-2011

Engine Cooling - V8 5.0L Petrol - Cooling Fan

Removal and Installation

Special Tool(s)

303-1142 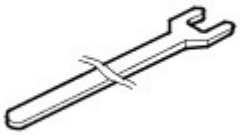 E46076	303-1142 Viscous Coupling Wrench
303-1143 E55382	303-1143 Viscous Coupling Holding Tool

Removal

- NOTE: Removal steps in this procedure may contain installation details.

1. Disconnect the battery ground cable.

   Refer to: Specifications (414-00 Battery and Charging System - General Information, Specifications).

2. Refer to: Air Cleaner Outlet Pipe T-Connector (303-12D Intake Air Distribution and Filtering - V8 5.0L Petrol, Removal and Installation).

3. Refer to: Air Cleaner Outlet Pipe LH (303-12D Intake Air Distribution and Filtering - V8 5.0L Petrol, Removal and Installation).

4. Refer to: Air Cleaner Outlet Pipe RH (303-12D Intake Air Distribution and Filtering - V8 5.0L Petrol, Removal and Installation).

5.

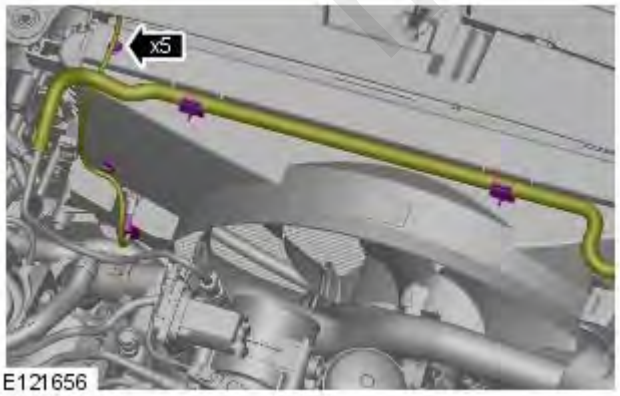

E121656

mcx30.com

6.

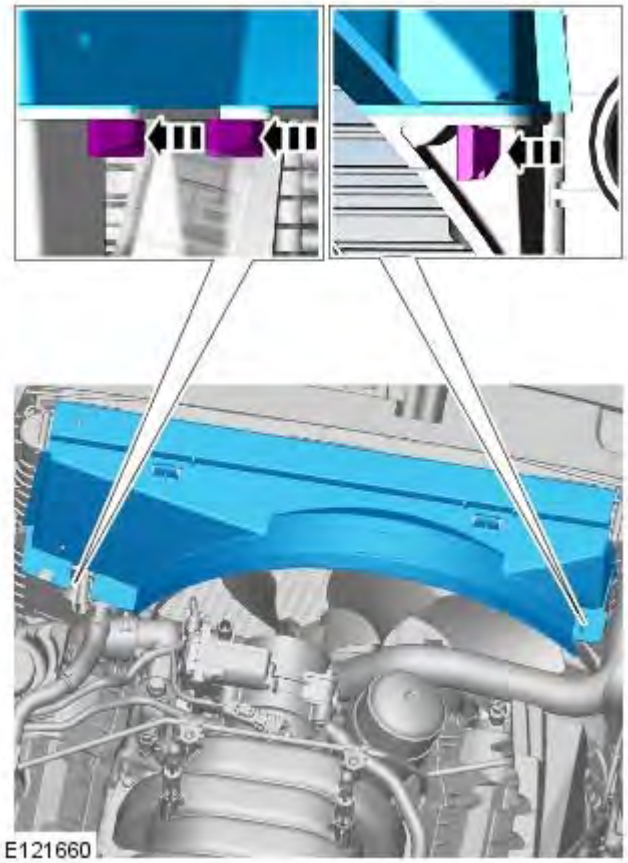

7.

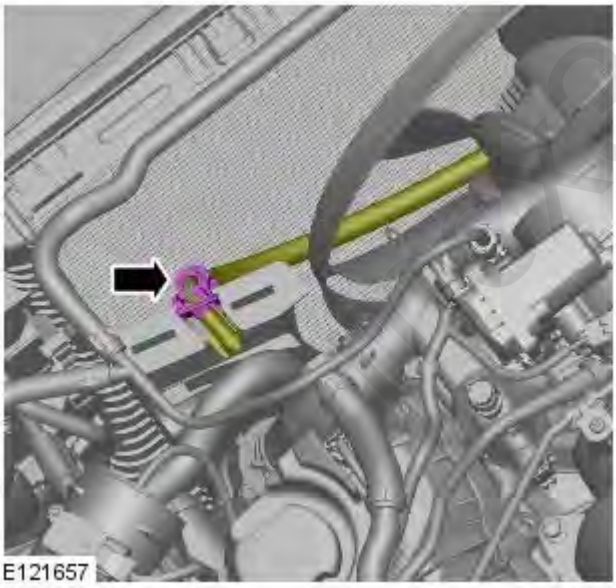

80.com

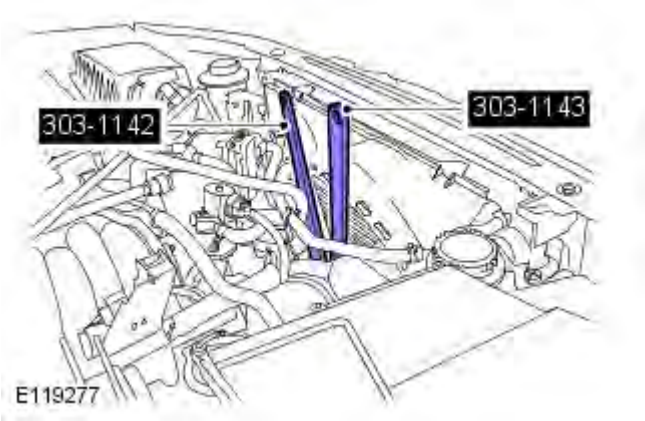

8. **8.** CAUTION: Always protect the cooling pack elements to prevent accidental damage.

   • NOTE: Some variation in the illustrations may occur, but the essential information is always correct.

   • NOTE: The thread is left handed.

   Special Tool(s): 303-1142, 303-1143
   Torque: 65 Nm

Installation

1. To install, reverse the removal procedure.

mcx30.com

Published: 11-May-2011

Engine Cooling - V8 5.0L Petrol - Coolant Pump

Removal and Installation

Removal

- NOTE: Removal steps in this procedure may contain installation details.

1. Disconnect the battery ground cable.

   Refer to: Specifications (414-00 Battery and Charging System - General Information, Specifications).

2. **2.** WARNING: Make sure to support the vehicle with axle stands.

   Raise and support the vehicle.

3. Refer to: Cooling System Draining, Filling and Bleeding (303-03D Engine Cooling - V8 5.0L Petrol, General Procedures).

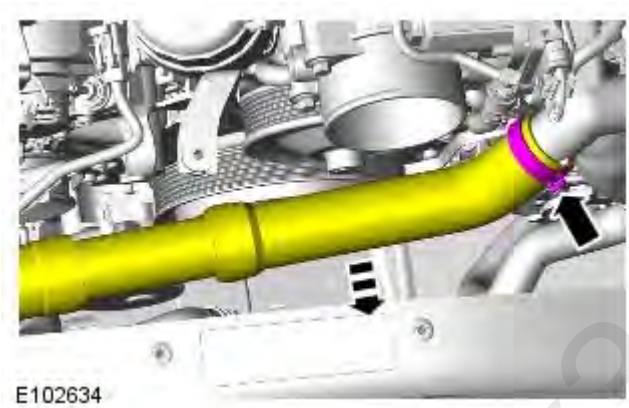

4. **4.** NOTE: Some variation in the illustrations may occur, but the essential information is always correct.

5. Refer to: Accessory Drive Belt (303-05D Accessory Drive - V8 5.0L Petrol, Removal and Installation).

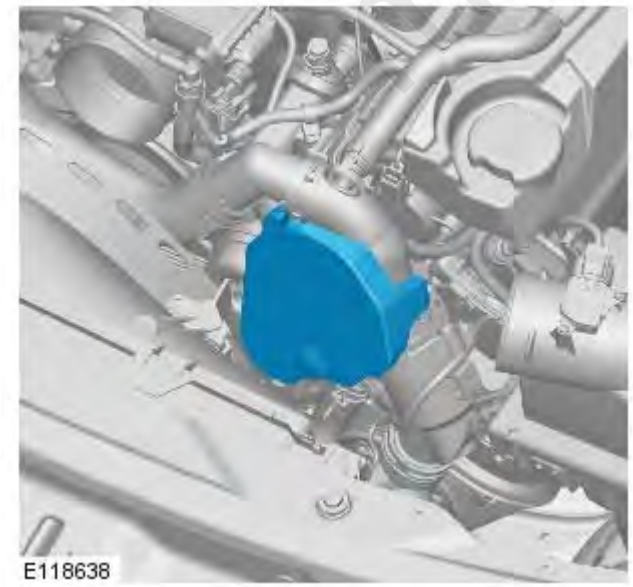

6.

mcx30.com

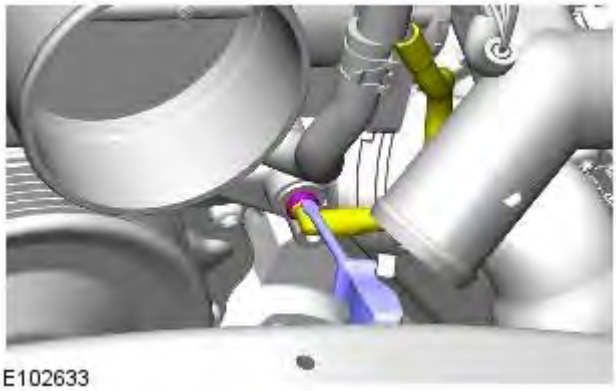
E102633

7.

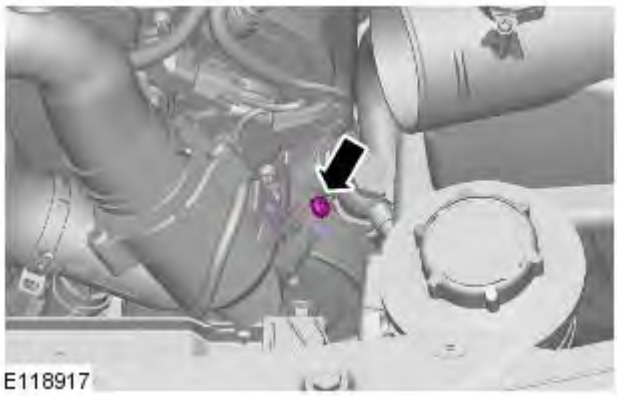
E118917

8. **8.** NOTE: Some variation in the illustrations may occur, but the essential information is always correct.

- *Torque:* 10 Nm

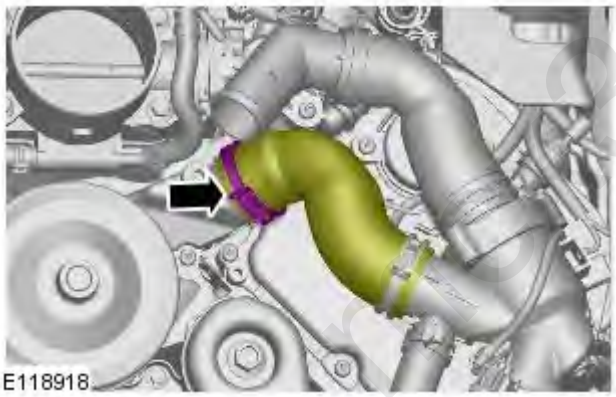
E118918

9.

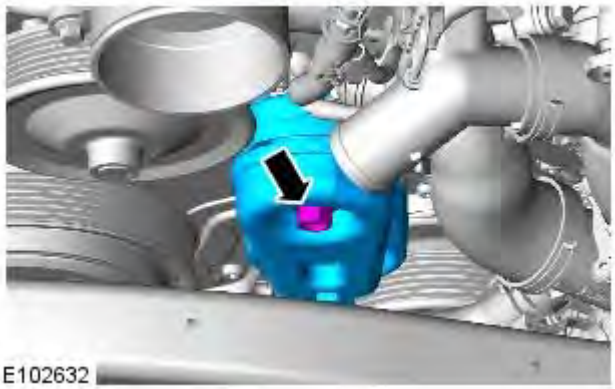
E102632

10. *Torque:* 40 Nm

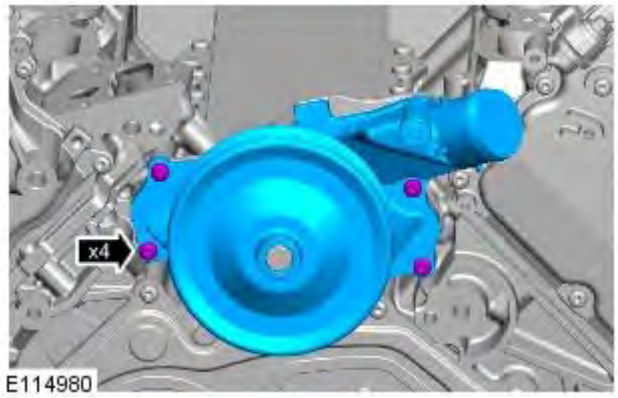

11. **11.** WARNING: Fluid loss is unavoidable, use absorbent cloth or a container to collect the fluid.

CAUTION: Engine coolant will damage the paint finished surfaces. If spilt, immediately remove the coolant and clean the area with water.

- NOTE: Engine shown removed for clarity.
  - *Torque:* 12 Nm

12. **12.** CAUTIONS:

Note the fitted position of the component prior to removal.

A new O-ring seal is to be installed.

- NOTE: Install new gaskets.

Installation

mcx30.com

1. **1.** NOTE: Engine shown removed for clarity.

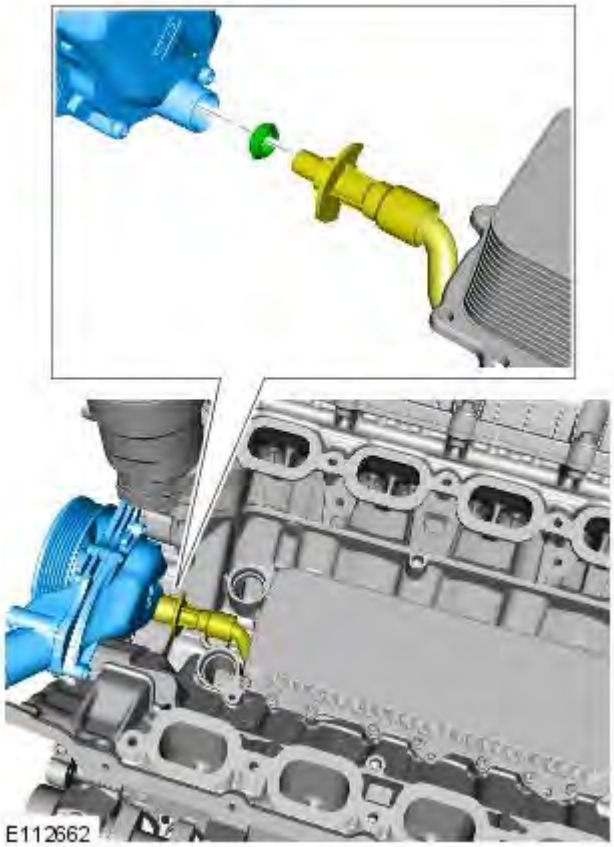

2. To install, reverse the removal procedure.

mcx30.com

Published: 11-May-2011

Engine Cooling - V8 5.0L Petrol - Radiator

Removal and Installation

Removal

- NOTE: Removal steps in this procedure may contain installation details.

1. Disconnect the battery ground cable.

   Refer to: Specifications (414-00 Battery and Charging System - General Information, Specifications).

2. **2.** WARNING: Make sure to support the vehicle with axle stands.

   Raise and support the vehicle.

3. Refer to: Air Conditioning (A/C) System Recovery, Evacuation and Charging (412-00 Climate Control System - General Information, General Procedures).

4. Refer to: Cooling System Draining, Filling and Bleeding (303-03D Engine Cooling - V8 5.0L Petrol, General Procedures).

5. Refer to: Radiator Grille (501-08 Exterior Trim and Ornamentation, Removal and Installation).

6. Refer to: Cooling Fan (303-03D Engine Cooling - V8 5.0L Petrol, Removal and Installation).

7.

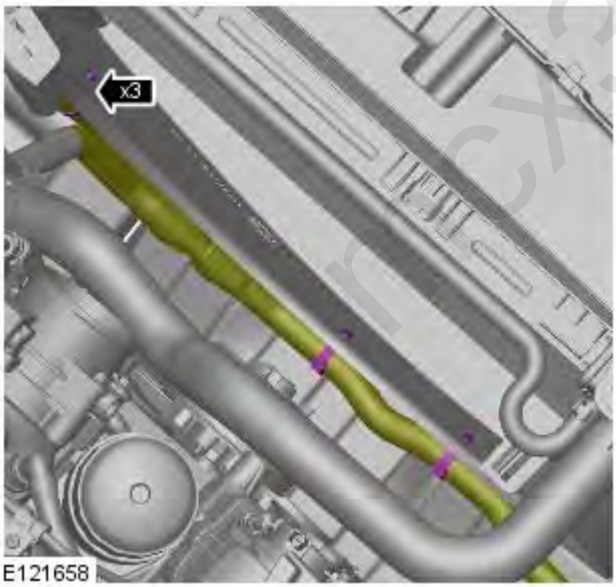

mcx30.com

8.

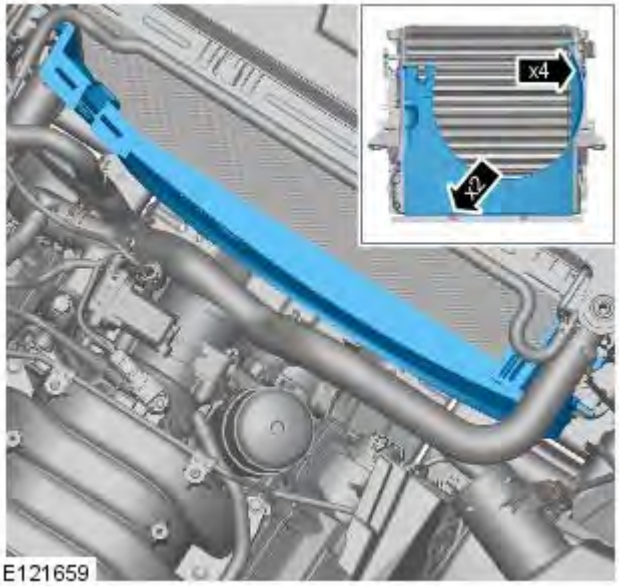

9.

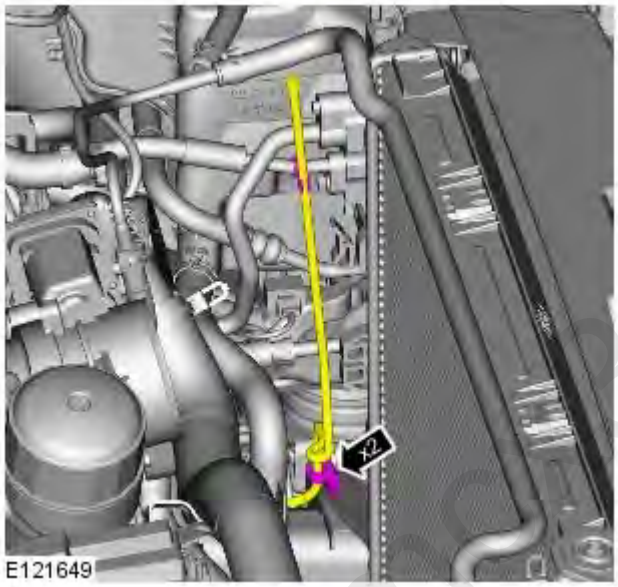

10. *Torque:* 9 Nm

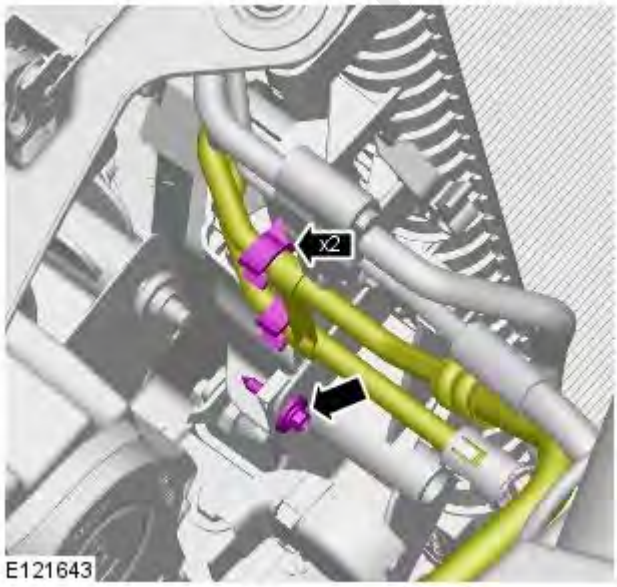

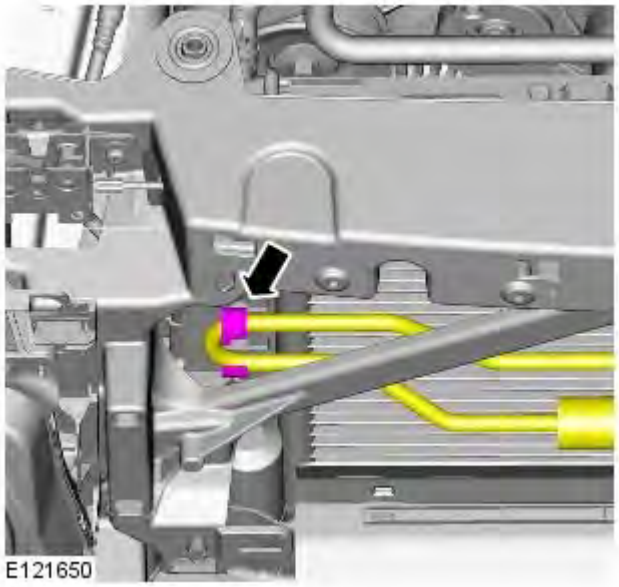

11.

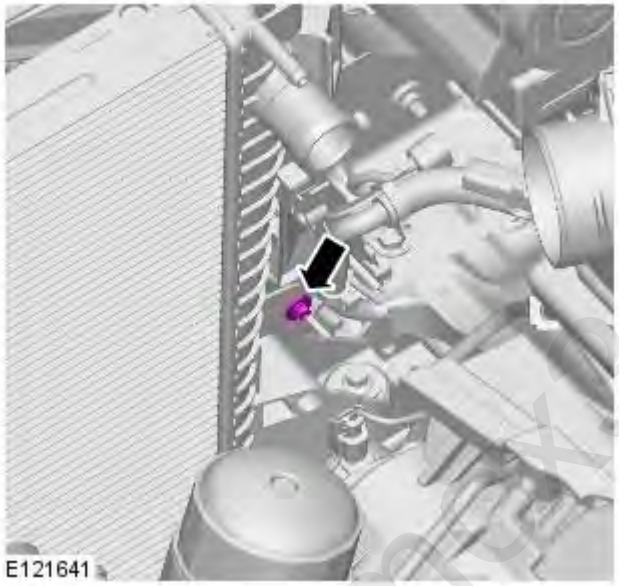

12. *Torque:* 9 Nm

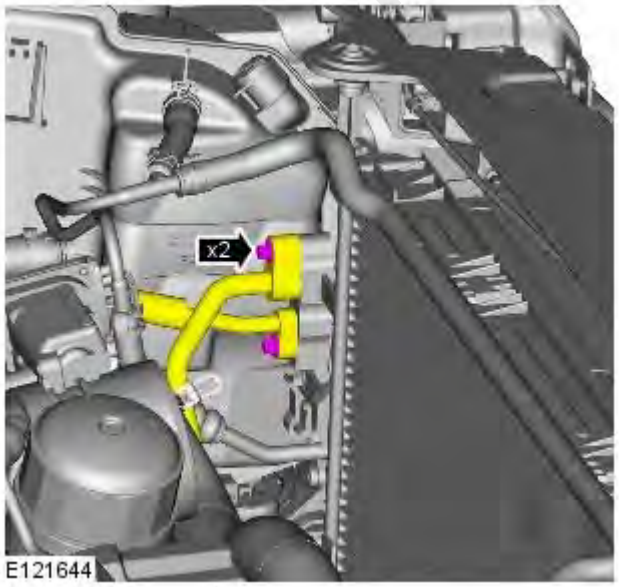

13. **13.** CAUTION: Before disconnecting or removing the components, make sure the area around the joint faces and connections are clean. Plug open connections to prevent contamination.

Torque: 10 Nm

mx80.com

14.

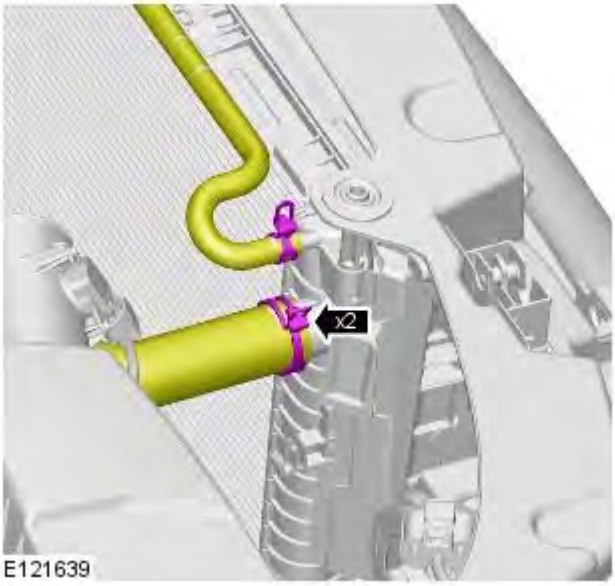

E121639

15.

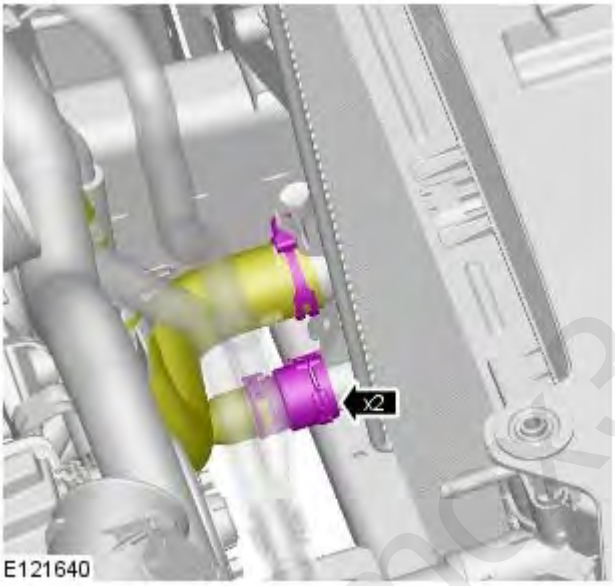

E121640

16.

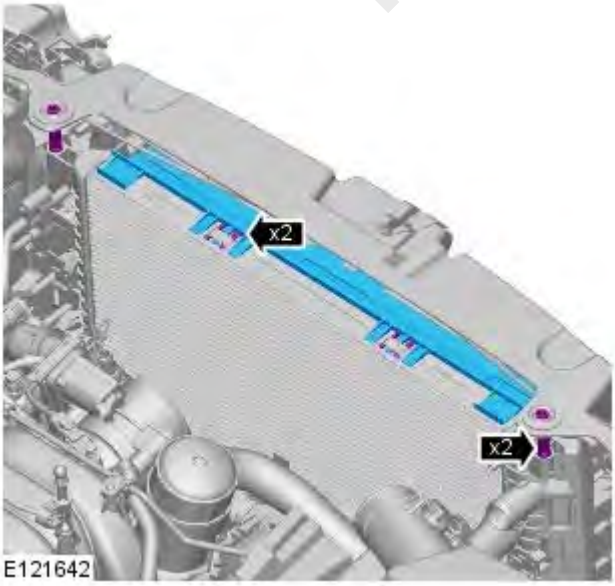

E121642

mc430.com

17. **17.** CAUTION: Always protect the cooling pack elements to prevent accidental damage.

Torque: 25 Nm

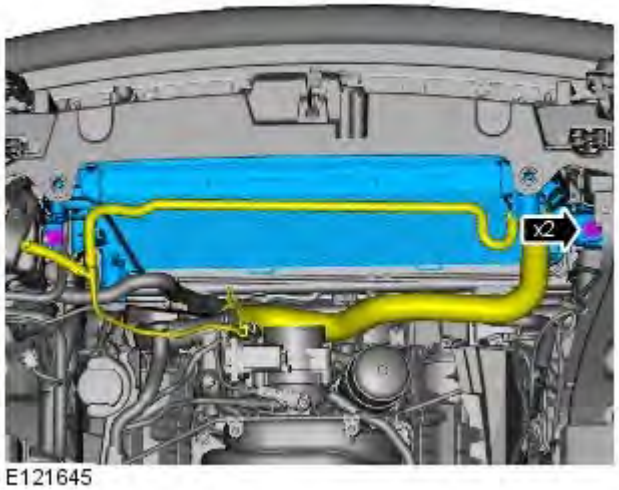

E121645

18. **18.** NOTE: Do not disassemble further if the component is removed for access only.

Torque: 10 Nm

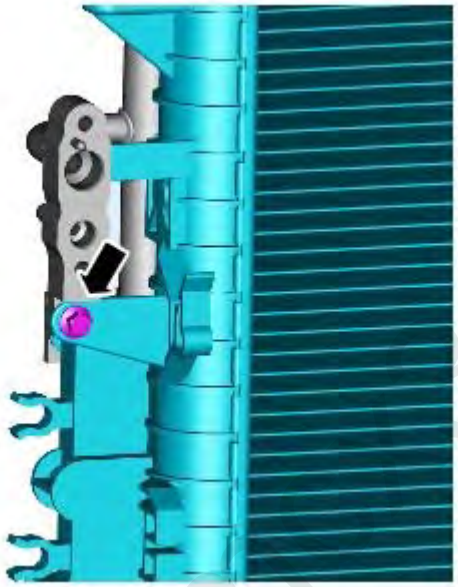

E121647

19. *Torque:* 10 Nm

E121646

20.

E121648

Installation

1. To install, reverse the removal procedure.

mcx30.com

Published: 11-May-2011

Engine Cooling - V8 5.0L Petrol - Thermostat Housing

Removal and Installation

Removal

- NOTE: Removal steps in this procedure may contain installation details.

1. Disconnect the battery ground cable.

   Refer to: Specifications (414-00 Battery and Charging System - General Information, Specifications).

2. **2.** WARNING: Make sure to support the vehicle with axle stands.

   Raise and support the vehicle.

3. Refer to: Cooling System Draining, Filling and Bleeding (303-03D Engine Cooling - V8 5.0L Petrol, General Procedures).

4. Refer to: Air Cleaner Outlet Pipe T-Connector (303-12D Intake Air Distribution and Filtering - V8 5.0L Petrol, Removal and Installation).

5. Refer to: Air Cleaner Outlet Pipe LH (303-12D Intake Air Distribution and Filtering - V8 5.0L Petrol, Removal and Installation).

6.

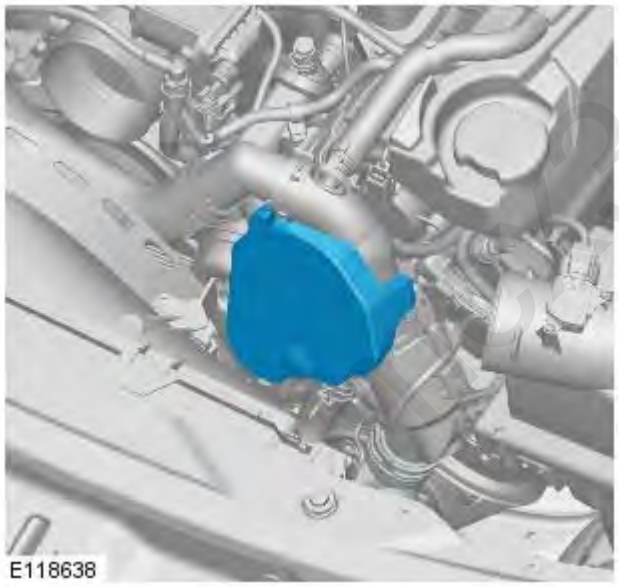

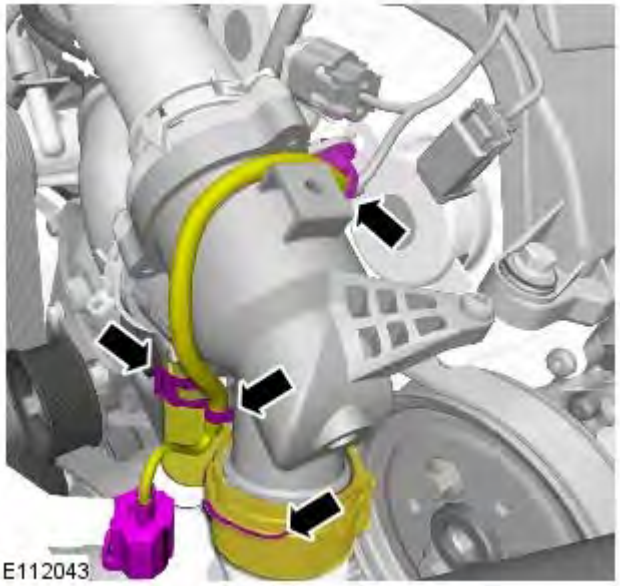

7. **7.** NOTE: Some variation in the illustrations may occur, but the essential information is always correct.

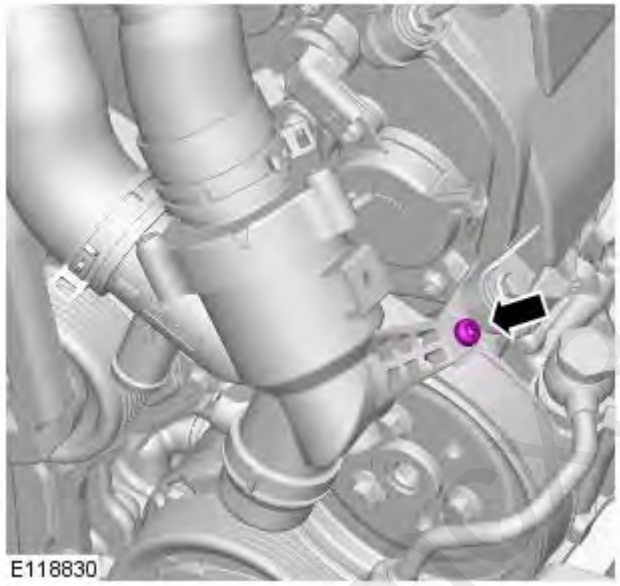

8. **8.** NOTE: Some variation in the illustrations may occur, but the essential information is always correct.

   Torque: 10 Nm

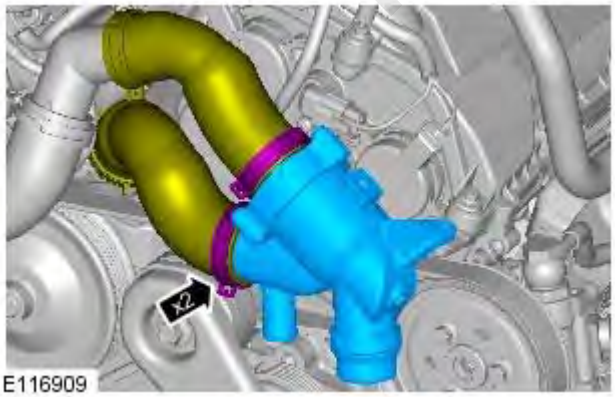

9. **9.** NOTE: Some variation in the illustrations may occur, but the essential information is always correct.

   • NOTE: The retaining clips cannot be removed from the pipe.

Installation

1. To install, reverse the removal procedure.